"THE MATERIAL HEREIN IS FOR INFORMATION PURPOSES ONLY AND IS SUBJECT TO CHANGE WITHOUT NOTICE. DIGITAL EQUIPMENT CORPORATION ASSUMES NO RESPONSIBILITY FOR ANY ERRORS WHICH MAY APPEAR HEREIN."

***** FIELD MAINTENANCE PRINT SET *****

TABLE OF CONTENTS

		UNIT VARIATIONS
B-DD-SC008-AA	STAR COUPLER & CAB ASSY (AA)	SC008-AA
E-UA-SC008-AA	STAR COUPLER & CAB ASSY (AA)	
K-PL-SC008-AA	STAR COUPLER & CAB ASSY (AA)	
E-AD-70-18554	DOOR ASSEMBLY FRONT	SC008-AB
K-PL-70-18554	DOOR ASSEMBLY FRONT	
AD-70-18555	REAR DOOR ASSEMBLY SC008	
PL-70-18555	REAR DOOR ASSEMBLY SC008	
B-DD-SC008-AB	STAR COUPLER EXPANDER	
E-UA-SC008-AB	STAR COUPLER EXPANDER	
K-PL-SC008-AB	STAR COUPLER EXPANDER	
E-AD-70-18771	STAR COUPLER ASSY (BOX)	
K-PL-70-18771	STAR COUPLER ASSY (BOX)	
E-AD-70-18717	FRONT PANEL ASSY SC008	
K-PL-70-18717	FRONT PANEL ASSY SC008	
D-UA-54-14216	STAR COUPLER MODULE	
K-PL-54-14216	STAR COUPLER MODULE	
B-BD-54-14216	STAR COUPLER MODULE	
D-CS-54-14216	STAR COUPLER MODULE	
C-UA-70-18530	8/16 JUMPER CABLE	
K-PL-70-18530	8/16 JUMPER CABLE	
A-PS-36-18845	LABEL, NODE 8-16	
A-PS-36-18806-01	LABEL, CONFIGURATION PATH CI780	
A-PS-36-19211	LABEL, CAUTION BEND RADII	
A-PS-36-19264-01/16	LABEL, NODE ID	
D-SS-74-25772-00	PAN, STAR COUPLER	
D-SS-74-25772-01	PAN, STAR COUPLER	
A-SP-37-00669-0-0	PACKING INSTRUCTIONS AA & AB	
D-IC-SC008-0-2	STAR SYSTEM INTERCONNECT	

FIELD MAINTENANCE PRINT SET

MP01370

DIGITAL EQUIPMENT CORPORATION

SC008-A

USED ON OPTION/MODEL	
SC008	

SHEET 1 OF 1

DRN. M. BAPTISTE	DATE 2/10/82
CHK'D R. NUEBLING	DATE 2/10/82
PROJ. ENG. R. NUEBLING	DATE 2/10/82
FIELD SERV. B. LOVETT	DATE 2/10/82

digital

TITLE: SC008 FIELD MAINT. PRINT SET

SIZE	CODE	NUMBER	REV
B	TC	SC008-A-1	A

DIST.

"THIS DRAWING AND SPECIFICATIONS, HEREIN, ARE THE PROPERTY OF DIGITAL EQUIPMENT CORPORATION AND SHALL NOT BE REPRODUCED OR COPIED OR USED IN WHOLE OR IN PART AS THE BASIS FOR THE MANUFACTURE OR SALE OF ITEMS WITHOUT WRITTEN PERMISSION.
COPYRIGHT © 1982 DIGITAL EQUIPMENT CORPORATION."

"THE MATERIAL HEREIN IS FOR INFORMATION PURPOSES ONLY AND IS SUBJECT TO CHANGE WITHOUT NOTICE. DIGITAL EQUIPMENT CORPORATION ASSUMES NO RESPONSIBILITY FOR ANY ERRORS WHICH MAY APPEAR HEREIN."

*** DRAWING DIRECTORY ***

UNIT VARIATIONS	
VAR	TITLE
SC008-AA	STAR COUPLER & CAB ASSY (AA)
SC008-AB	EXPANDER, STAR COUPLER

USED ON OPTION/MODEL
SC008

DRN. M. BAPTISTE	DATE 2/10/82
CHK'D M. NUEBLING	DATE 2/10/82
PROJ. ENG. R. NUEBLING	DATE 2/10/82
PROD. M. WARSHAW	DATE 2/10/82

SHEET 1 OF 2

"THIS DRAWING AND SPECIFICATIONS, HEREIN, ARE THE PROPERTY OF DIGITAL EQUIPMENT CORPORATION AND SHALL NOT BE REPRODUCED OR COPIED OR USED IN WHOLE OR IN PART AS THE BASIS FOR THE MANUFACTURE OR SALE OF ITEMS WITHOUT WRITTEN PERMISSION. COPYRIGHT © 1982 DIGITAL EQUIPMENT CORPORATION.

digital

TITLE:
STAR COUPLER & CAB ASSY

SIZE	CODE	NUMBER	REV
B	DD	SC008-AA-0	A

DIST.

TW

	DRAWING NUMBER	DESCRIPTION	
1	E-UA-SC008-AB-0	STAR COUPLER 7 CAB ASSY (AA)	E/M
	D-MD-7425765-0-0	TROUGH, CABLE, SIDE	M
	D-IA-7425764-0-0	TROUGH, CABLE, REAR	M
	C-MD-7425774-0-0	CLAMP, CABLE	M
	D-MD-7425876-0-0	BRACKET, DOOR SUPPORT	M
	C-MD-7425881-0-0	BRACKET, DOOR HINGE & END PANEL	M
	C-IA-7426008-0-0	BRACKET, DOOR LOCK MTG.	M
	D-MD-7425775-0-0	TRIM, REAR BASE	M
	D-IA-7425761-0-0	CROSSBAR, TROUGH STAR COUPLER	M
	D-MD-7422244-0-0	BRACKET, REAR VENT SUPPORT (SINGLE)	M
	C-MD-7422221-0-0	BRKT, DOOR HINGE/END PANEL LOCK	M
	C-MD-7422272-0-0	PIVOT BRKT BOTTOM REAR PANEL (RT)	M
	B-MD-7425882-0-0	BRACKET, DOOR LOCK	M
	B-MD-7425007-0-0	BRACKET, DOOR LOCK (B)	M
	A-PS-3618806-0-0	LABEL CONFIGURATION PATH CI780	M
	A-PS-1212972-0-0	SPRING, RECEPTACLE FASTENER	M
	A-PS-3619211-0-0	LABEL, CAUTION BEND RADII	M
	C-MD-7422222-0-0	BRACKET, DOOR LOCK	M
	D-IC-SC008-0-2	STAR SYSTEM INTERCONNECT	

	DRAWING NUMBER	DESCRIPTION	
2	B-DD-SC008-AB-0	EXPANDER, STAR COUPLER	E/M
3	C-AD-7018770-0-0	TERMINATOR STORAGE ASSY	E/M
	C-MD-7425874-0-0	BRACKET MTG CONN STORAGE	M
4	D-AD-7018541-0-0	BNCI CABLE SUB ASSY	E/M
	A-PS-3616073-0-0	LABEL, ID W/COPY VERTICAL	M
5	D-UA-BNCI-0-0	BNCI CABLE ASSEMBLY	E/M
6	D-AD-7018554-0-0	DOOR ASSEMBLY FRONT	
7	E-AD-7018717-0-0	FRONT PANEL ASSEMBLY	E/M
	D-UA-5414216-0-0	STAR COUPLER MODULE	E/M
	D-IA-7425772-0-0	PAN, STAR COUPLER	
8	E-AD-7018771-0-0	STAR COUPLER ASSEMBLY	E/M
	D-IA-7425776-0-0	ENCLOSURE, STAR COUPLER	M
	D-MD-7425759-0-0	BRACKET, MOUNTING ENCLOSURE	M
9	E-AD-7018555-0-0	DOOR ASSY REAR	M
	B-MD-7422619-0-0	PIN, PIVOT	

TYPE: E = ELECTRICAL
M = MECHANICAL
E/M = ELECTRO/MECHANICAL

digital

TITLE: STAR COUPLER & CAB ASSY

SHEET 2 OF 2	SIZE B	CODE DD	NUMBER SC008-AA	REV A

TW

NOTES:

1. SWIVEL CASTERS ARE AT FRONT OF CAB.
2. HOLE 62 IS AT TOP OF THE FRAME VERTICAL.
3. CAB WILL BE ASSEMBLED WITH ALL U-NUT RETAINERS (ITEM NO 26) BOTTOM OR TOP CABLE EXIT & MAXIMUM COMPLIMENT CONFIGURATION. ALL OTHER HARDWARE TO BE SUPPLIED WITH EXPANSION KIT.
4. ITEMS 14&32,22&23,28&30 TO BE ADJUSTED AT ASSY FOR DOOR LOCK ALIGNMENT.
5. EXPANSION: STAR COUPLER ASSY LOCATION & DECAL(S) APPLICATION PER SYSTEM CONFIGURATION. SEE SHEET 4. REFER TO INTERCONNECT DRWG D-IC-C1780-0-3.
6. HARDWARE SUPPLIED WITH ITEM 3.
7. TORQUE SCREW TO 30 IN/LBS
8. TORQUE ITEM 40 TO 10 IN/LBS TO PREVENT DIMPLING OF FAB.
9. ITEMS 19,21,36,37,38 ARE LOOSE PIECES (NOT MOUNTED TO CAB).

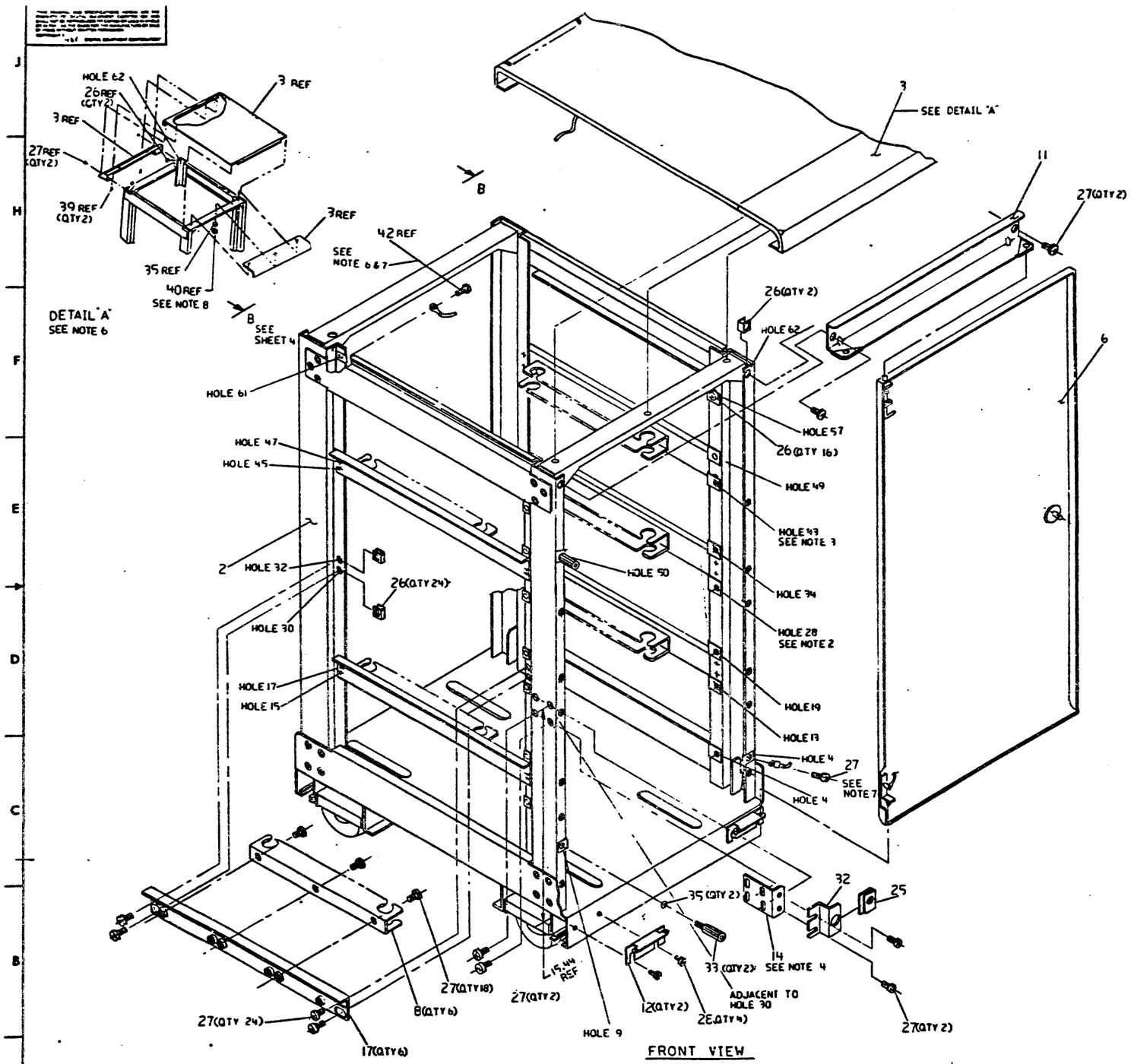

FRONT VIEW

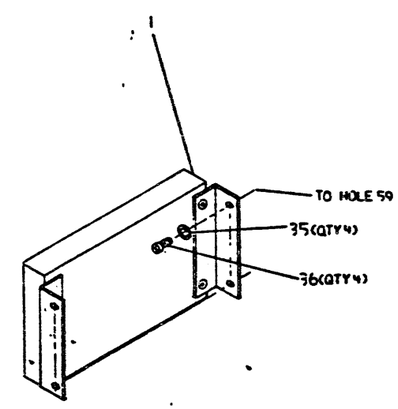

CAUTION: OFF SHEET PARTS LIST
REFER TO K-PL-SC008-AA-DBP (Z2617A)

DO NOT SCALE DRAWING			
REMOVE BURRS AND BREAK SHARP CORNERS			
SEE PARTS LIST			

digital

STAR COUPLER & CAB ASSY

E UA SC008-AA-0 A

B-ND-SC008-AA

Tw 1

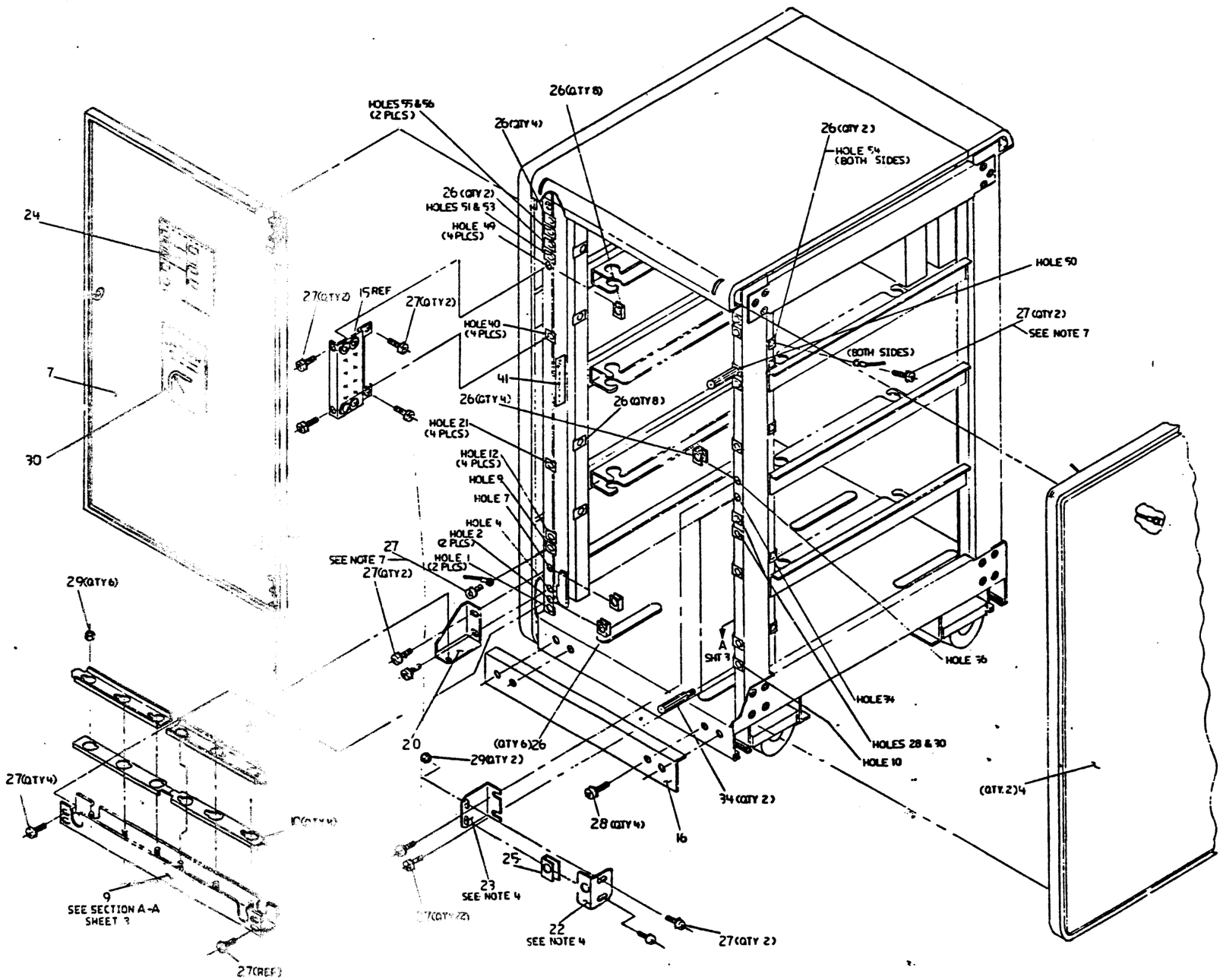

VIEW OF CAB REAR

STAR COUPLER & CAB ASSY

DOCUMENT NUMBER SCC03-AA-0 A

SCALE SHEET OF

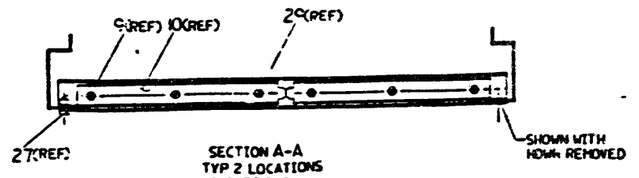

SECTION A-A
TYP 2 LOCATIONS
SHEETS 2&3

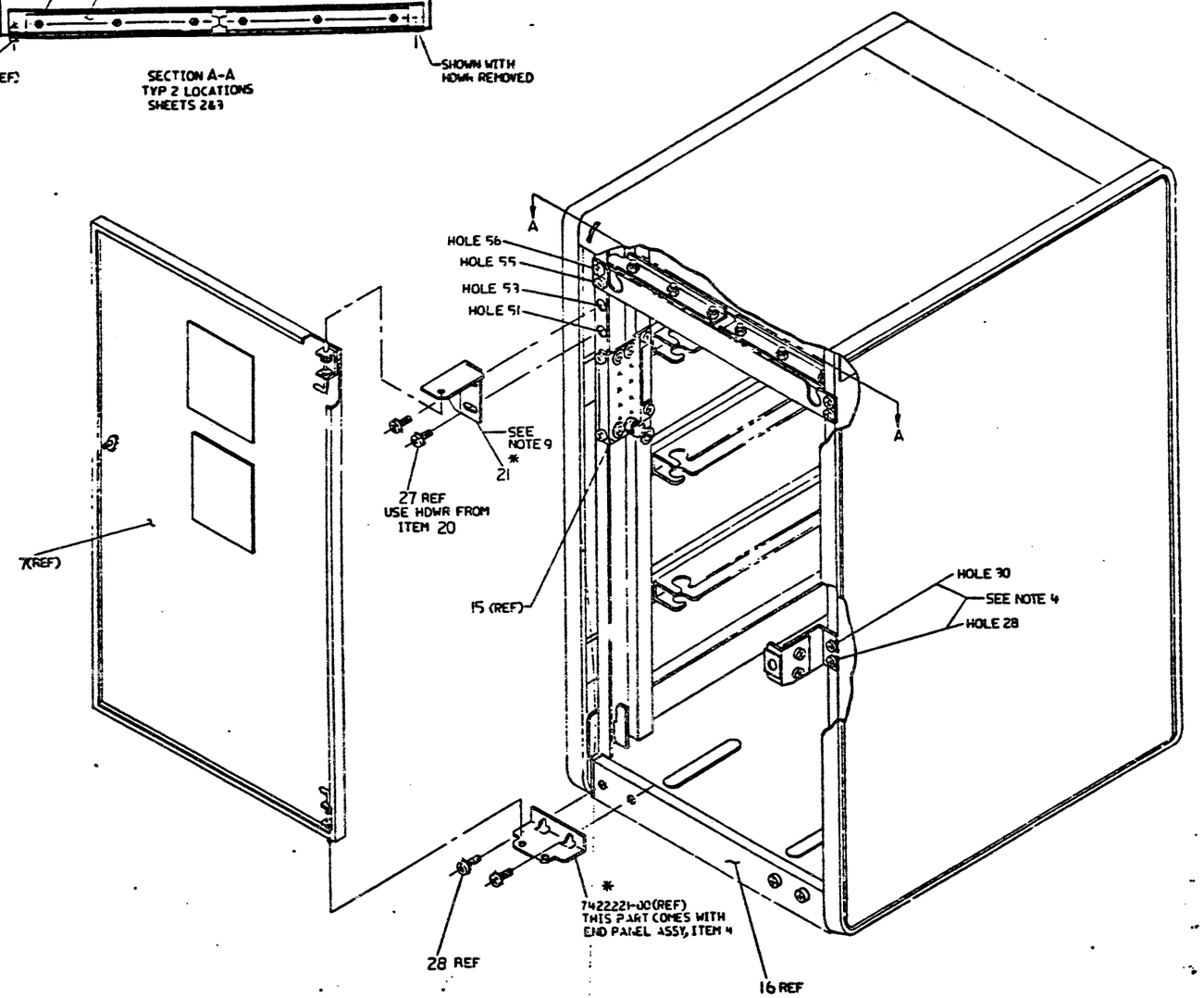

* OPTIONAL REAR DOOR MOUNTING
FOR TOP OF CABINET CABLE EXIT
REMOVE & DISCARD ITEMS 16&20

REAR VIEW OF CAB

TITLE STAR COUPLER & CAB ASSY	DOCUMENT NUMBER		REV
	SIZE E	5C308-1A-2	A
	SCALE	SHEET 1 OF 4	

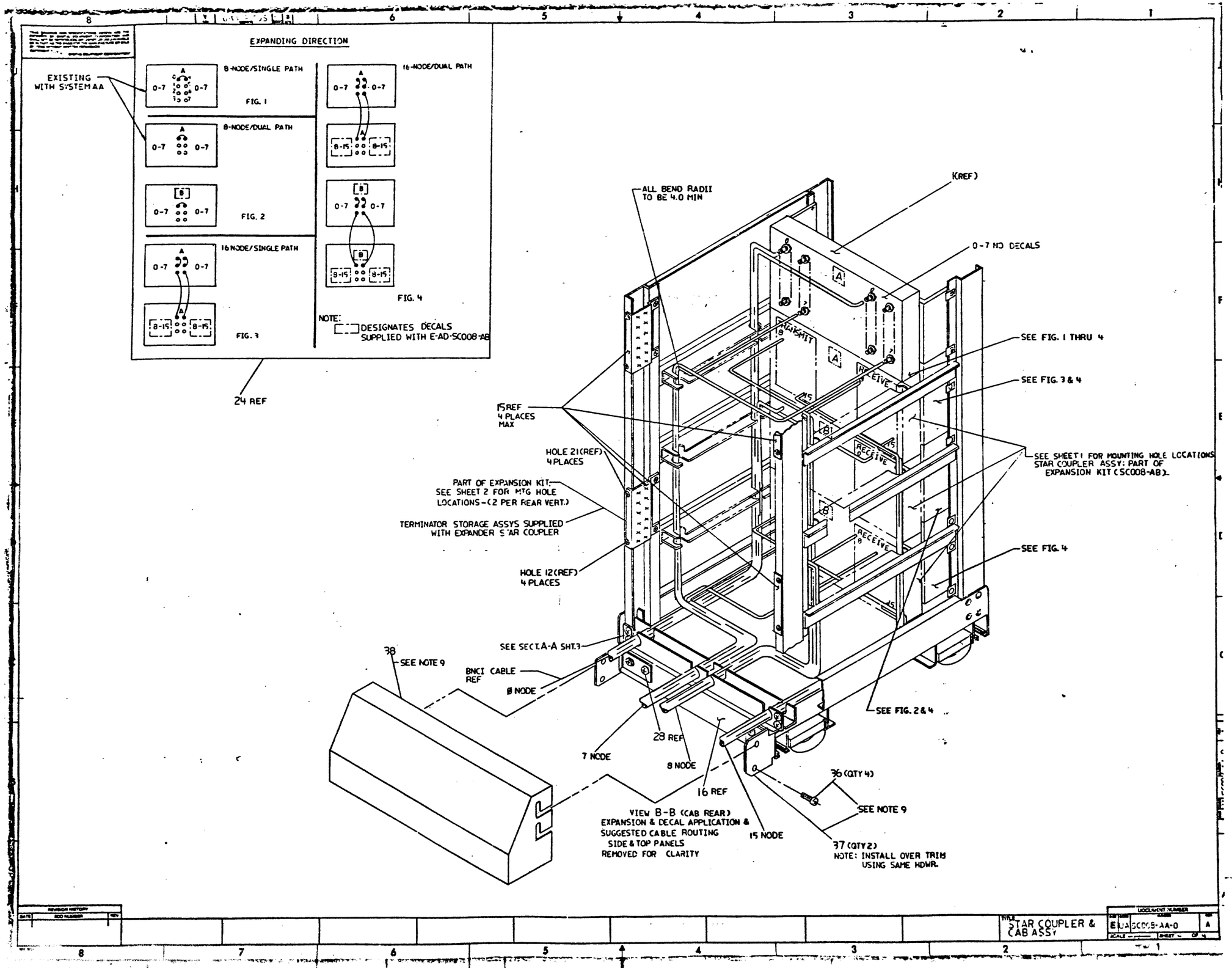
EXPANDING DIRECTION
EXISTING WITH SYSTEM AA
8-NODE/SINGLE PATH
FIG. 1
8-NODE/DUAL PATH
FIG. 2
16 NODE/SINGLE PATH
FIG. 3
16-NODE/DUAL PATH
FIG. 4
NOTE:
DESIGNATES DECALS SUPPLIED WITH E-AD-SC008-AB
24 REF
ALL BEND RADII TO BE 4.0 MIN
(REF)
0-7 NO DECALS
SEE FIG. 1 THRU 4
SEE FIG. 3 & 4
15 REF 4 PLACES MAX
HOLE 21 (REF) 4 PLACES
PART OF EXPANSION KIT SEE SHEET 2 FOR MTG HOLE LOCATIONS-(2 PER REAR VERT.)
TERMINATOR STORAGE ASSYS SUPPLIED WITH EXPANDER STAR COUPLER
HOLE 12 (REF) 4 PLACES
SEE SHEET 1 FOR MOUNTING HOLE LOCATIONS STAR COUPLER ASSY: PART OF EXPANSION KIT (SC008-AB).
SEE FIG. 4
SEE FIG. 2 & 4
SEE SECT. A-A SHT. 3
38
SEE NOTE 9
BNCI CABLE REF
0 NODE
7 NODE
28 REF
8 NODE
16 REF
15 NODE
36 (QTY 4)
SEE NOTE 9
37 (QTY 2)
NOTE: INSTALL OVER TRIM USING SAME HDWR.
VIEW B-B (CAB REAR)
EXPANSION & DECAL APPLICATION & SUGGESTED CABLE ROUTING
SIDE & TOP PANELS REMOVED FOR CLARITY
REVISION HISTORY
DATE
ECO NUMBER
REV
TITLE
STAR COUPLER & CAB ASSY
DOCUMENT NUMBER
E U A SC008-AA-0
A
SCALE
SHEET OF

AUTOMATED BY PRTLST.3P(44)

P A R T S L I S T

LINE	ITEM	DOCUMENT NUMBER	PART NUMBER	DESCRIPTION	QUANTITY PER VARIATION AA	AC
1	1	E-AD-7018771-0-0	7018771-00	STAR COUPLER ASSY (BOX)	1	2
2	2	E-UA-H9542-FD-0	H9542-FD	40" FRONT LOADING CAB FRAME (H95	1	1
3	3	E-UA-H9544-LA-0	H9544-LA	TOP COVER,SINGLE WIDTH FRONT LOA	1	1
4	4	E-UA-H9544-AA-0	H9544-AA	40"END PANEL,GREY FRAME,DARK BRO	2	2
5	5	E-AD-7016534-0-0	7016534-00	*** THIS ITEM IS NOT USED ***	-	-
6	6	D-AD-7018554-0-0	7018554-00	FRONT DOOR ASSY (SC008AA)	1	1
7	7	E-AD-7018555-0-0	7018555-00	REAR DOOR ASSY SC008	1	1
8	8	D-MD-7425765-0-0	7425765-00	TROUGH,CABLE,SIDE	6	6
9	9	D-IA-7425764-0-0	7425764-00	TROUGH,CABLE,REAR	1	1
10	10	C-MD-7425774-0-0	7425774-00	CLAMP·CABLE	4	4
11	11	D-MD-7425876-0-0	7425876-00	BRACKET,DOOR SUPPORT	1	1
12	12	C-MD-7425881-0-0	7425881-00	BRACKET,DOOR HINGE & END PANEL L	2	2
13	13		1218633-00	*** THIS ITEM IS NOT USED ***	-	-
14	14	C-IA-7426008-0-0	7426008-00	BRACKET,DOOR LOCK MTG.	1	1
15	15	C-AD-7018770-0-0	7018770-00	TERMINTOR STORAGE ASSY	1	2
16	16	D-MD-7425775-0-0	7425775-00	TRIM,REAR BASE	1	1
17	17	D-IA-7425761-0-0	7425761-00	CROSSBAR,TROUGH STAR COUPLER	6	6
18	18	D-MD-7422244-0-0	7422244-00	BRACKET,REAR VENT SUPPORT (SINGL	REF	REF
19	19	C-MD-7422221-0-0	7422221-00	BRKT,DOOR HINGE/END PANEL LOCK	REF	REF
20	20	C-MD-7422272-0-0	7422272-00	PIVOT BRKT BOTTOM REAR DOOR(RH)	1	1
21	21	SEE NOTE	7422272-01	PIVOT BRKT BOTTOM REAR DOOR L.H.	1	1
22	22	B-MD-7425882-0-0	7425882-00	BRACKET,DOOR LOCK	1	1
23	23	B-MD-7426007-0-0	7426007-00	BRACKET,DOOR LOCK (B)	1	1
24	24	A-PS-3618806-0-0	3618806-01	LABEL,CONFIGURATION PATH CI780	1	1
25	25	A-PS-1212972-0-0	1212972-02	SPRING,RECEPTACLE FASTENER 1/4 T	2	2
26	26		9007786-00	RETAINER, U-NUT, 10-32	83	83
27	27		9009700-00	SCREW,TRUS,PHIL,SEMS10-32X .500L	54	54
28	28		9006056-03	SCREW,TRUS,PHIL, 1/4-20X 1/2	8	8
29	29		9006565-00	NUT,KEP 10-32X 3/8 AF	8	8
30	30	A-PS-3619211-0-0	3619211-01	LABEL,CAUTION BEND RADII	1	1

REVISION HISTORY			BASIC PART NO: SC008											
ENG	ECO NUMBER	REV	SECTION A OF A	DRN: J.SULLIVAN	DATE: 09-JUL-81	D	I	G	I	T	A	L
---	INITIAL	A	SECTION. VARIATION INDEX [A] AA,AC	CHK'D: R.ROCHA	DATE: 09-JUL-81	TITLE PARTS LIST STAR COUPLER & CAB. ASSY (AA)						
			[B]	DES.ENG.: G.NORTON	DATE: 09-JUL-81							
			[C]	RESP.ENG.: R.NUEBLING	DATE: 09-JUL-81	DOCUMENT NUMBER						
			[D]			SIZE	CODE	NUMBER		REV		
			[E]	MFG.ENG.: M.WARSHAW	DATE: 26-JAN-82	K	PL	SC008-AA-DBP		A		
			[F]	ASSEMBLY NUMBER: E-UA-SC008-AA-0	TOP DOCUMENT NUMBER: B-DD-SC008-AA-0	FILE NAME: Z2617A.PLS				EDIT # 3		

"THIS DRAWING AND SPECIFICATIONS HEREIN, ARE THE PROPERTY OF DIGITAL EQUIPMENT CORPORATION AND SHALL NOT BE REPRODUCED OR COPIED OR USED IN WHOLE OR IN PART AS THE BASIS FOR THE MANUFACTURE OR SALE OF ITEMS WITHOUT WRITTEN PERMISSION.
COPYRIGHT (C) 1982, DIGITAL EQUIPMENT CORPORATION "

P A R T S L I S T

LINE	ITEM	DOCUMENT NUMBER	PART NUMBER	DESCRIPTION	QUANTITY PER VARIATION AA	AC
31	31	BLANK		*** THIS ITEM IS NOT USED ***	-	-
32	32	C-MD-7422222-0-0	7422222-00	BRACKET,DOOR LOCK	1	1
33	33	B-AD-7016703-0-0	7016703-02	STOP DOOR 1.62	2	2
34	34	B-AD-7016703-0-0	7016703-00	STOP DOOR (REAR)	2	2
35	35		9006664-00	WASHER, FLAT, .437 OD X .218 ID	11	11
36	36	SEE NOTE	9006074-03	SCREW,TRUS,PHIL, 10-32X 5/8	8	12
37	37	SEE NOTE	7426225-01	BRACKET,CABLE COVER MTG	2	2
38	38	SEE NOTE	7426224-01	COVER,CABLE EXIT	1	1
39	39		9006070-02	SCREW,FLAT,PHIL, 10-32X 5/16	REF	REF
40	40		9008965-00	NUT, STOP, S.S. 10-32 X 3/8 X 1/	REF	REF
41	41		3617674-00	LABEL,SERIAL & POWER,UNIVERSAL	2	3
42	42		4700045-00	WRENCH,ALLEN HEX.-5/32, 2"LG	2	2
43	43		3619264-17	LABEL,SET VAR 01 THRU 16	1	2
44	44	BLANK		*** THIS ITEM IS NOT USED ***	-	-
45	45		9010156-00	SCREW,HEX,SLOT,SEMS 10-32X .500L	5	5
46	46		9007651-00	WASHER, LOCK, EXTERNAL TOOTH #10	5	5
47	47		H9544-HB	KIT OF 4 LEVELERS	1	1
48	48		3618845-01	LABEL,NODE 9-16	0	1
49	49		3618845-02	LABEL,NODE MARKER "B"	0	1

50 NOTE: ITEMS 21,36,37,42,&47 INDICATES LOOSE ITEMS (NOT MOUNTED ON CAB)
51 NOTE: FOR AB & AD VARIATION SEE PARTS LIST SC008-AB

D I G I T A L	TITLE	SECTION	SIZE	CODE	DOCUMENT NUMBER	REV
	STAR COUPLER & CAB. ASSY (AA)	A OF A	K	PL	SC008-AA-DBP	A

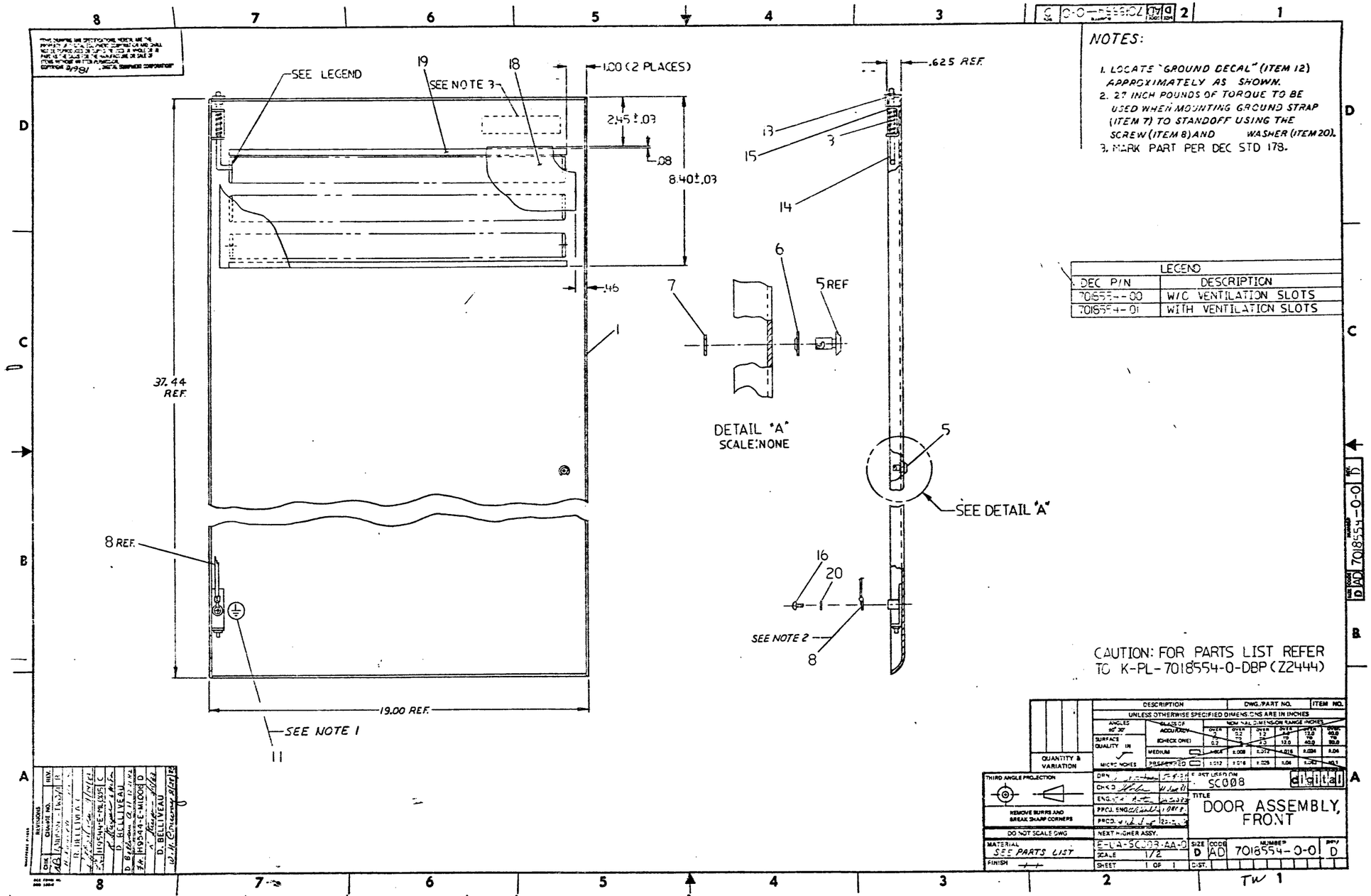
SEE LEGEND
19
18
SEE NOTE 3
1.00 (2 PLACES)
2.45 ±.03
.08
8.40±.03
.46
1
37.44 REF.
8 REF.
11
SEE NOTE 1
19.00 REF.
.625 REF.
13
3
15
14
6
7
5 REF
DETAIL "A"
SCALE: NONE
5
SEE DETAIL "A"
16
20
SEE NOTE 2
8
NOTES:
1. LOCATE "GROUND DECAL" (ITEM 12) APPROXIMATELY AS SHOWN.
2. 27 INCH POUNDS OF TORQUE TO BE USED WHEN MOUNTING GROUND STRAP (ITEM 7) TO STANDOFF USING THE SCREW (ITEM 8) AND WASHER (ITEM 20).
3. MARK PART PER DEC STD 178.
LEGEND
DEC P/N | DESCRIPTION
7018554-00 | W/O VENTILATION SLOTS
7018554-01 | WITH VENTILATION SLOTS
CAUTION: FOR PARTS LIST REFER TO K-PL-7018554-0-DBP (Z2444)
DESCRIPTION | DWG./PART NO. | ITEM NO.
UNLESS OTHERWISE SPECIFIED DIMENSIONS ARE IN INCHES
ANGLES ±0° 30'
SURFACE QUALITY IN MICRO INCHES
QUANTITY & VARIATION
THIRD ANGLE PROJECTION
REMOVE BURRS AND BREAK SHARP CORNERS
DO NOT SCALE DWG
MATERIAL SEE PARTS LIST
FINISH
DRN
CHKD
ENG
PROJ. ENG
PROD.
NEXT HIGHER ASSY.
E-DA-SC008-AA-0
SCALE 1/2
SHEET 1 OF 1
SC008
digital
TITLE
DOOR ASSEMBLY, FRONT
SIZE D
CODE AD
NUMBER 7018554-0-0
REV D
DIST.
REVISIONS
D. BELLIVEAU
D. BELLIVEAU

AUTOMATED BY PRTLST.3P(44)

P A R T S L I S T

LINE	ITEM	DOCUMENT NUMBER	PART NUMBER	DESCRIPTION	QUANTITY PER VARIATION 00	01
1	1	D-IA-7018543-0-0	7018543-00	FRONT DOOR WELDMENT	1	-
2	2	BLANK		*** THIS ITEM IS NOT USED ***	-	-
3	3		1216225-01	SPRING,COMPRESSION .3190DX1.540	1	1
4	4	BLANK		*** THIS ITEM IS NOT USED ***	-	-
5	5		1212972-06	FASTENER,	1	1
6	6		1212972-03	GROMMET,RETAINER POLYETHELENE	1	1
7	7		9008500-00	RING,RETAINER FOR .243	1	1
8	8		1213756-12	GROUND STRAP	1	1
9	9		9000049-38	SCREW,SEMS,PLAIN SLOT 10-	1	-
10	10	BLANK		*** THIS ITEM IS NOT USED ***	-	-
11	11		3613272-00	LABEL,ADH BACK,MYLAR CAP	1	1
12	12	D-IA-7018543-0-0	7018543-01	FRONT DOOR WELDMENT W/SLOTS	-	1
13	13		1219010-00	BUSHING, SNAP	1	1
14	14	B-MD-7426147-0-0	7426147-00	PIN,DOOR HINGE	1	1
15	15		9009273-02	RING,RETAINER EXTERNAL FOR .219	1	1
16	16		9010156-00	SCREW,SEMS HEX 10-	1	1
17	17		9007651-00	*** THIS ITEM IS NOT USED ***	-	-
18	18		1211255-10	FILTER,AIR FOAM 030PPI .	1	-
19	19		7413707-04	STRIP	2	-
20	20		9006664-00	WASHER,FLAT SST	1	1

REVISION HISTORY

ENG	ECO NUMBER	REV
	INITIAL	X03
	INITAL	A
RB	7018554-TW001	B
RB	H9544-E-ML005	C
R.B	H9544-E-ML006	D

BASIC PART NO: 7018554

SECTION A OF A

SECTION. VARIATION INDEX
[A] 00,01
[B]
[C]
[D]
[E]
[F]

DRN: P. TOUSIGNANT	DATE: 10-JUN-81	
CHK'D: A. ROCHA	DATE: 10-JUN-81	
DES.ENG.: G.NORTON	DATE: 10-JUN-81	
RESP.ENG.: G.NORTON	DATE: 10-JUN-81	
MFG.ENG.: M.WARSHAW	DATE: 10-JUN-81	
ASSEMBLY NUMBER: E-AD-7018554-0-0	TOP DOCUMENT NUMBER: E-UA-SC008-AA-0	

D I G I T A L

TITLE PARTS LIST
DOOR ASSEMBLY FRONT

DOCUMENT NUMBER

SIZE	CODE	NUMBER	REV
K	PL	7018554-0-D8P	D

FILE NAME: Z2444D.PLS

EDIT # 9

"THIS DRAWING AND SPECIFICATIONS HEREIN, ARE THE PROPERTY OF DIGITAL EQUIPMENT CORPORATION AND SHALL NOT BE REPRODUCED OR COPIED OR USED IN WHOLE OR IN PART AS THE BASIS FOR THE MANUFACTURE OR SALE OF ITEMS WITHOUT WRITTEN PERMISSION.
COPYRIGHT (C) 1983. DIGITAL EQUIPMENT CORPORATION "

NOTES

1. LOCATE GROUND DECAL (ITEM 6) APPROXIMATELY AS SHOWN.
2. 30 INCH POUNDS OF TORQUE TO BE USED WHEN MOUNTING GROUND STRAP (ITEM 7) TO STANDOFF USING 10-32 SCREW (ITEM 8) AND LOCKWASHER (ITEM 11).

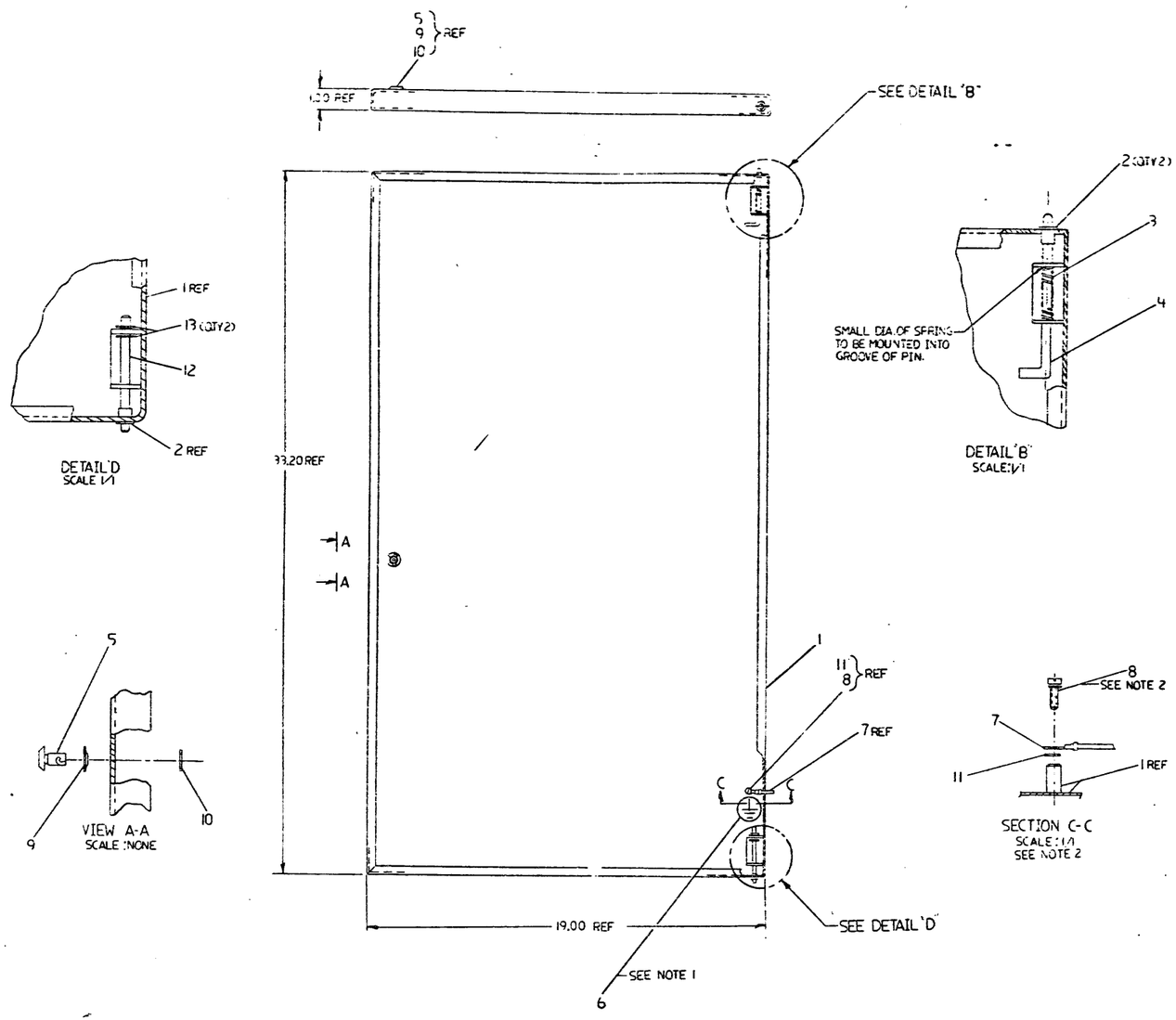

CAUTION: OFF SHEET PARTS LIST
SEE K-PL-7019555-0-0BP (Z2581)

DESCRIPTION	DRAWING NO	PART NO	REQ'D

UNLESS OTHERWISE SPECIFIED DIMENSIONS ARE IN INCHES AND THE FOLLOWING TOLERANCES APPLY: (PER DEC STD 114)

INCHES TOLERANCES	ANGLES ± 30'	APPLICABLE DIMENSION RANGE	DIMENSION RANGE IN INCHES					
			OVER 0 TO 1	OVER 1 TO 3	OVER 3 TO 6	OVER 6 TO 12	OVER 12 TO 48	OVER 48 TO 120
.X ± .1	SURFACE QUALITY	CHECK THIS	± .02	± .05	± .08	± .10	± .16	
.XX ± .02								
.XXX ± .005	MICROINCHES		± .005	± .005	± .01	± .01	± .01	± .01

QUANTITY & VARIATION

THIRD ANGLE PROJECTION

DO NOT SCALE DRAWING

REMOVE BURRS AND BREAK SHARP CORNERS

MATERIAL: SEE PARTS LIST

DRWN: P. Denton DATE: 26 MAR 81
CHKD: M. Bryant DATE: 26 FEB 81
DES ENG: J.F. Hoitsma DATE: 27 Feb 81
PROJ ENG: Z.C. [illegible] DATE: 26 MAR 82
MFG ENG: [illegible] DATE: [illegible]

TITLE: DOOR ASSY, REAR

digital

DOCUMENT NUMBER: SIZE E, CODE 1D, NUMBER 7019555-0-0, REV A

REVISIONS PER LIST
SLIP NUMBER
DATE

REV A
DRAWING 7019555-0-0

AUTOMATED BY PRTLST.3P(44)

P A R T S L I S T

LINE	ITEM	DOCUMENT NUMBER	PART NUMBER	DESCRIPTION	QUANTITY PER VARIATION 00
1	1	E-IA-7018542-0-0	7018542-00	REAR DOOR WELDMENT	1
2	2		9008111-00	BUSHING,SNAP,NYLON 3/8 MGTHOLE	2
3	3		1216225-00	SPRING,HINGE 1.54LG	1
4	4		1216223-00	PIN,DOOR HINGE	1
5	5		1212972-06	FASTENER,QUARTER TURN W/RECESSED	1
6	6		3613272-00	LABEL,ADH BACK,MYLAR CAP	1
7	7		1213756-12	GROUND STRAP	1
8	8		9010156-00	SCREW,HEX,SLOT,SEMS 10-32X .500L	1
9	9		1212972-03	GROMMET HALF FOR 1/4 TURN FASTEN	1
10	10		9008500-00	RING, RETAINING .500 O.D. X.423	1
11	11		9007651-00	WASHER, LOCK, EXTERNAL TOOTH #10	1
12	12	B-MD-7422619-0-0	7422619-00	PIN,PIVOT	1
13	13		9009644-01	E-RING,EXTERNAL FOR 015	2

REVISION HISTORY			BASIC PART NO: 7018555										
ENG	ECO NUMBER	REV	SECTION A OF A	DRN: S. CHARTIER	DATE: 19-MAY-81		D	I	G	I	T	A	L
---	INITIAL	A	SECTION. VARIATION INDEX [A] 00	CHK'D: R.J. RILEY	DATE: 19-MAY-81	TITLE PARTS LIST DOOR ASSY REAR							
			[B]	DES.ENG.: G.NORTON	DATE: 19-MAY-81								
			[C]	RESP.ENG.: G.NORTON	DATE: 19-MAY-81	DOCUMENT NUMBER							
			[D]			SIZE	CODE	NUMBER				REV	
			[E]	MFG.ENG.: M.WARSHAW	DATE: 19-MAY-81	K	PL	7018555-0-DBP				A	
			[F]	ASSEMBLY NUMBER: E-AD-7018555-0-0	TOP DOCUMENT NUMBER: E-IA-7018542-0-0			FILE NAME: Z2581.PLS				EDIT # 11	

"THIS DRAWING AND SPECIFICATIONS HEREIN, ARE THE PROPERTY OF DIGITAL EQUIPMENT CORPORATION AND SHALL NOT BE REPRODUCED OR COPIED OR USED IN WHOLE OR IN PART AS THE BASIS FOR THE MANUFACTURE OR SALE OF ITEMS WITHOUT WRITTEN PERMISSION. COPYRIGHT (C) 1982 DIGITAL EQUIPMENT CORPORATION."

"THE MATERIAL HEREIN IS FOR INFORMATION PURPOSES ONLY AND IS SUBJECT TO CHANGE WITHOUT NOTICE. DIGITAL EQUIPMENT CORPORATION ASSUMES NO RESPONSIBILITY FOR ANY ERRORS WHICH MAY APPEAR HEREIN."

*** DRAWING DIRECTORY ***

UNIT VARIATIONS	
VAR	TITLE
SC008-AB	EXPANDER, STAR COUPLER

USED ON OPTION/MODEL
SC008

DRN. M. BAPTISTE	DATE 2/10/82	
CHK'D R. NUEBLING	DATE 2/10/82	
PROJ. ENG. R. NUEBLING	DATE 2/10/82	
PROD. M. WARSHAW	DATE 2/10/82	

SHEET 1 OF 2

"THIS DRAWING AND SPECIFICATIONS, HEREIN, ARE THE PROPERTY OF DIGITAL EQUIPMENT CORPORATION AND SHALL NOT BE REPRODUCED OR COPIED OR USED IN WHOLE OR IN PART AS THE BASIS FOR THE MANUFACTURE OR SALE OF ITEMS WITHOUT WRITTEN PERMISSION. COPYRIGHT © 1982 DIGITAL EQUIPMENT CORPORATION.

digital

TITLE:
EXPANDER STAR COUPLER

SIZE	CODE	NUMBER	REV
B	DD	SC008-AB-0	A

DIST.

TW

	DRAWING NUMBER	DESCRIPTION	
1	E-UA-SC008-AB-0	EXPANDER, STAR COUPLER	E/M
	C-PS-3618845-0-0	LABEL, MODE 8-16	M
	C-PS-3618845-0-0	LABEL, MODE MARKER 'B'	M
2	E-AD-7018771-0-0	STAR COUPLER ASSY (BOX)	M
	D-IA-7425776-0-0	ENCLOSURE, STAR COUPLER	M
	D-MD-7425759-0-0	BRACKET, MOUNTING ENCLOSURE	M
3	C-AD-7018770-0-0	TERMINATOR STORAGE ASSY	M
	C-MD-7425874-0-0	BRACKET MTG CONN. STORAGE	M
4	C-AD-2018530-0-0	8/16 JUMPER CABLE	E/M

TYPE: E = ELECTRICAL
M = MECHANICAL
E/M = ELECTRO/MECHANICAL

digital

TITLE: EXPANDER, STAR COUPLER

SHEET 2 OF 2	SIZE	CODE	NUMBER	REV
	B	DD	SC008-AB-0	A

TW

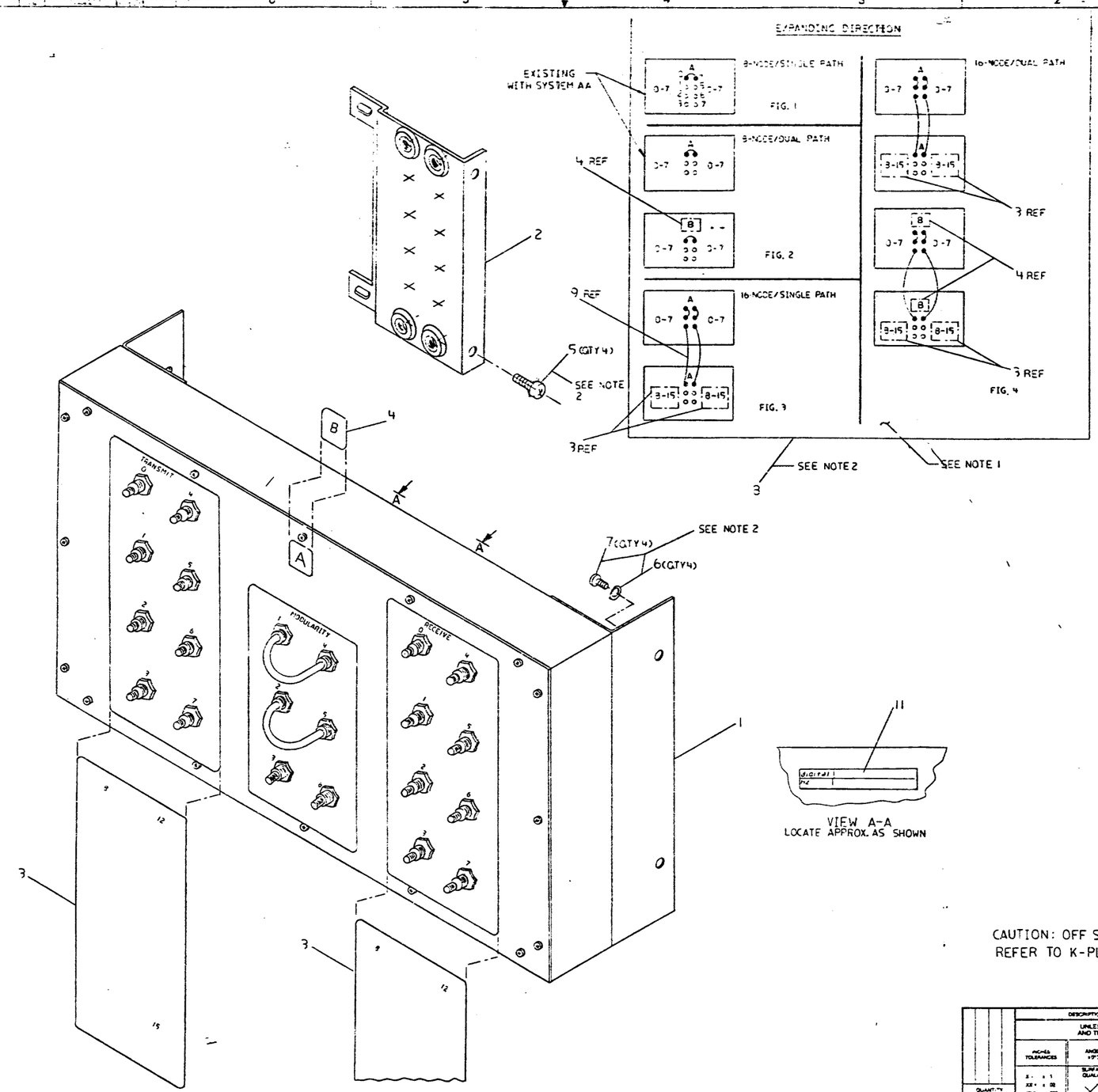

NOTES:

1. USE DECALS SUPPLIED WITH PACKAGE ITEM NUMBERS 3,4 & 8 DEPENDING ON VARIATIONS SHOWN IN FIGS 2,3 & 4.
2. ITEMS 2 THRU 8 & 12 & 13 ARE SHIPPED LOOSE.

CAUTION: OFF SHEET PARTS LIST
REFER TO K-PL-SC008-AB-DBP (Z3341A)

DESCRIPTION	
DRAWING NO.	
PART NO.	
ITEM NO.	

UNLESS OTHERWISE SPECIFIED DIMENSIONS ARE IN INCHES AND THE FOLLOWING TOLERANCES APPLY (PER DEC STD 114)

INCHES TOLERANCES	ANGLES ±0°30'	APPLICABLE DIMENSION RANGE	DIMENSION RANGE IN INCHES
X ± .1	SURFACE QUALITY	CHECK ONE	OVER 0 TO 0.2
XX ± .02			OVER 0.2 TO 1.2
XXX ± .005	MICROINCHES		OVER 1.2 TO 4.0
			OVER 4.0 TO 12.0
			OVER 12.0 TO 48.0
			OVER 48.0 TO 60.0
QUANTITY & VARIATION			± .02 / ± .05 / ± .10 / ± .204 / ± .308 / ± .012 / ± .016 / ± .206 / ± .04

THIRD ANGLE PROJECTION

DO NOT SCALE DRAWING

REMOVE BURRS AND BREAK SHARP CORNERS

MATERIAL: SEE PARTS LIST

FINISH

		DATE
DRAWN		3 NOV 81
CHK'D		3 NOV 81
DES ENG		3 FEB 82
MFG ENG		22 JAN 82
DES MGR		22 JAN 82

NEXT HIGHER ASSY: K-PL-SC008-AB

TITLE: EXPANDER, STAR COUPLER

digital

DOCUMENT NUMBER: SIZE E | CODE UA | NUMBER SC008-AB-0 | REV A

SCALE 1/1 | SHEET | OF

REVISION HISTORY

REV	DATE	DESCRIPTION

SC008-AB-0 REV A

AUTOMATED BY PRTLST.3P(44)

P A R T S L I S T

LINE	ITEM	DOCUMENT NUMBER	PART NUMBER	DESCRIPTION	QUANTITY PER VARIATION AB	AD
1	1	E-AD-7018771-0-0	7018771-00	STAR COUPLER ASSY (BOX)	1	2
2	2	C-AD-7018770-0-0	7018770-00	TERMINTOR STORAGE ASSY	1	2
3	3	C-PS-3618845-0-0	3618845-01	LABEL,NODE 9-16	1	2
4	4	C-PS-3618845-0-0	3618845-02	LABEL,NODE MARKER "B"	1	2
5	5		9009700-00	SCREW,TRUS,PHIL,SEMS10-32X .500L	4	8
6	6		9006664-00	WASHER, FLAT, .437 OD X .218 ID	4	8
7	7		9006074-03	SCREW,TRUS,PHIL, 10-32X 5/8	4	8
8	8		3618806-01	LABEL,CONFIGURATION PATH CI780	1	1
9	9	C-AD-7018530-0-0	7018530-00	8/16 JUMPER CABLE	REF	REF
10	10		3619211-01	LABEL,CAUTION BEND RADII	1	1
11	11		3617674-00	LABEL,SERIAL & POWER,UNIVERSAL	1	2
12	12		3619264-17	LABEL,SET VAR 01 THRU 16	1	2
13	13		9007786-00	RETAINER, U-NUT, 10-32	8	16

14 NOTE: FOR AA & AC VARIATIONS SEE PARTS LIST SC008-AA

REVISION HISTORY			BASIC PART NO: SC008										
ENG	ECO NUMBER	REV	SECTION A OF A	DRN: H. DARAKJIAN	DATE: 18-NOV-81		D	I	G	I	T	A	L
	INITIAL	A	SECTION, VARIATION INDEX [A] AB,AD	CHK'D: M. BAPTISTE	DATE: 18-NOV-81	TITLE PARTS LIST EXPANDER, STAR COUPLER							
			[B]	DES.ENG.: G. NORTON	DATE: 18-NOV-81								
			[C]	RESP.ENG.: R. CASABONA	DATE: 18-NOV-81	DOCUMENT NUMBER							
			[D]			SIZE	CODE	NUMBER				REV	
			[E]	MFG.ENG.: V. ADAMETZ	DATE: 18-NOV-81	K	PL	SC008-AB-DBP				A	
			[F]	ASSEMBLY NUMBER: E-UA-SC008-AB-0	TOP DOCUMENT NUMBER: B-DD-SC008-AB-0			FILE NAME: Z3341A.PLS				EDIT # 6	

"THIS DRAWING AND SPECIFICATIONS HEREIN, ARE THE PROPERTY OF DIGITAL EQUIPMENT CORPORATION AND SHALL NOT BE REPRODUCED OR COPIED OR USED IN WHOLE OR IN PART AS THE BASIS FOR THE MANUFACTURE OR SALE OF ITEMS WITHOUT WRITTEN PERMISSION. COPYRIGHT (C) 1982, DIGITAL EQUIPMENT CORPORATION "

NOTES:

1. ITEM 3 TO BE ATTACHED TO TRANSMIT /RECEIVE TNC CONNECTORS 2 THRU 7.

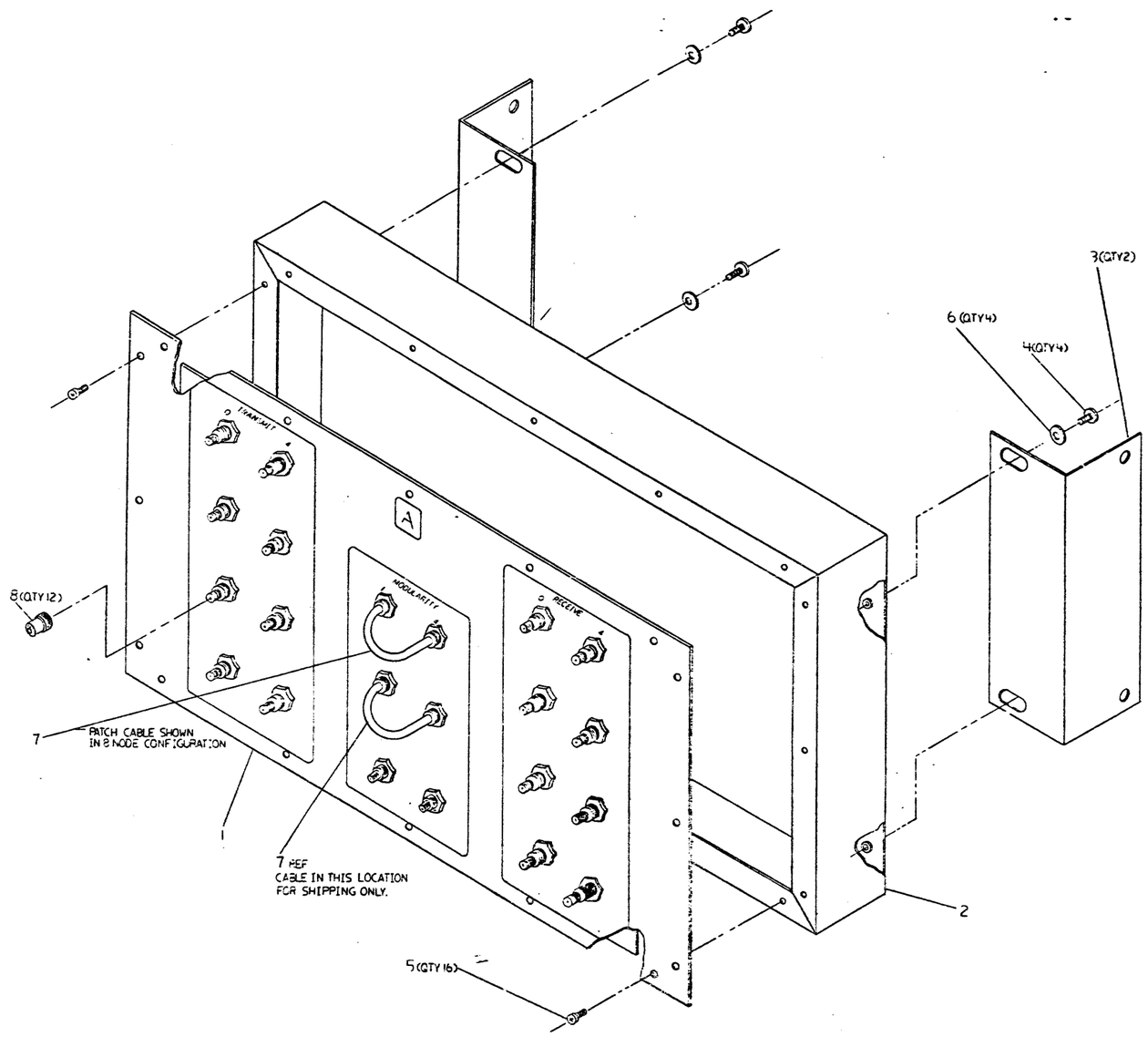

OFF SHEETS PARTS LIST
SEE K-PL-7018771-0-DBP(Z2605A)

ITEM NO.	DESCRIPTION	DRAWING NO.	PART NO.

UNLESS OTHERWISE SPECIFIED DIMENSIONS ARE IN INCHES AND THE FOLLOWING TOLERANCES APPLY (PER DEC STD 114B)

INCHES TOLERANCES	ANGLES ±2° 30'	APPLICABLE DIMENSION RANGE	DIMENSION RANGE IN INCHES					
	SURFACE QUALITY	INCHES	0 OVER 6	OVER 6 TO 12	OVER 12 TO 48	OVER 48 TO 120	OVER 120 TO 480	OVER 480 TO 960
X ± ± 1		2nd	0.2	0.3	1.0	1.0	1.0	1.0
XX ± ± .02			± .01	± .02	± .06	± .10	± .16	± .16
XXX ± ± .005	MICROINCHES		± .004	± .005	± .012	± .016	± .024	± .06

QUANTITY & VARIATION

THIRD ANGLE PROJECTION

DO NOT SCALE DRAWING

REMOVE BURRS AND BREAK SHARP CORNERS

MATERIAL: SEE PARTS LIST

FINISH

		DATE
DRN		12 Jan 81
DSN		2 Jan 81
DES ENGR		28 Jan 82
TEST ENGR		28 JAN 82
MFG ENGR		
NEXT HIGHER ASSY	E-UA-SC008-AB	

TITLE: STAR COUPLER ASSEMBLY

digital

DOCUMENT NUMBER

SIZE	CODE	NUMBER	REV.
E	AD	7018771-0-0	A

SCALE: / SHEET 1 OF 1

TW 1

AUTOMATED BY PRTLST.3P(44) | P A R T S L I S T | SHEET A1 OF A1

LINE	ITEM	DOCUMENT NUMBER	PART NUMBER	DESCRIPTION	QUANTITY PER VARIATION 00
1	1	E-AD-7018717-0-0	7018717-00	FRONT PANEL ASSY SC008	1
2	2	D-IA-7425776-0-0	7425776-00	ENCLOSURE,STAR COUPLER	1
3	3	D-MD-7425759-0-0	7425759-00	BRACKET,MOUNTING ENCLOSURE	2
4	4		9006071-01	SCREW,PAN,PHIL 10-32X 3/8 SS	4
5	5		9009701-00	SCREW,PAN,PHIL,SEMS 6-32X .312L	16
6	6		9006564-00	WASHER, FLAT, .437 OD X .218 ID	4
7	7	C-AD-7018530-0-0	7018530-00	8/16 JUMPER CABLE	2
8	8		1218633-00	CONN,COAX 1LINE TERM TNC	12

REVISION HISTORY			BASIC PART NO: 7018771										
ENG	ECO NUMBER	REV	SECTION A OF A	DRN: S.CHARTIER	DATE: 17-JUN-81		D	I	G	I	T	A	L
---	INITIAL	A	SECTION. VARIATION INDEX [A] 00	CHK'D: M. BAPTISTE	DATE: 17-JUN-81	TITLE PARTS LIST STAR COUPLER ASSEMBLY							
			[B]	DES.ENG.: G. NORTON	DATE: 17-JUN-81								
			[C]	RESP.ENG.: R.NUEBLING	DATE: 17-JUN-81	DOCUMENT NUMBER							
			[D]			SIZE	CODE	NUMBER				REV	
			[E]	MFG.ENG.: M.WARSHAW	DATE: 17-JUN-81	K	PL	7018771-0-DBP				A	
			[F]	ASSEMBLY NUMBER: E-AD-7018771-0-0	TOP DOCUMENT NUMBER: E-UA-SC008-AB-0			FILE NAME: Z2605A.PLS				EDIT # 13	

"THIS DRAWING AND SPECIFICATIONS HEREIN, ARE THE PROPERTY OF DIGITAL EQUIPMENT CORPORATION AND SHALL NOT BE REPRODUCED OR COPIED OR USED IN WHOLE OR IN PART AS THE BASIS FOR THE MANUFACTURE OR SALE OF ITEMS WITHOUT WRITTEN PERMISSION. COPYRIGHT (C) 1982. DIGITAL EQUIPMENT CORPORATION "

NOTE

1. NUTS AND WASHERS SUPPLIED WITH 5414215-00 TORQUE NUTS TO 8 FT/LBS.

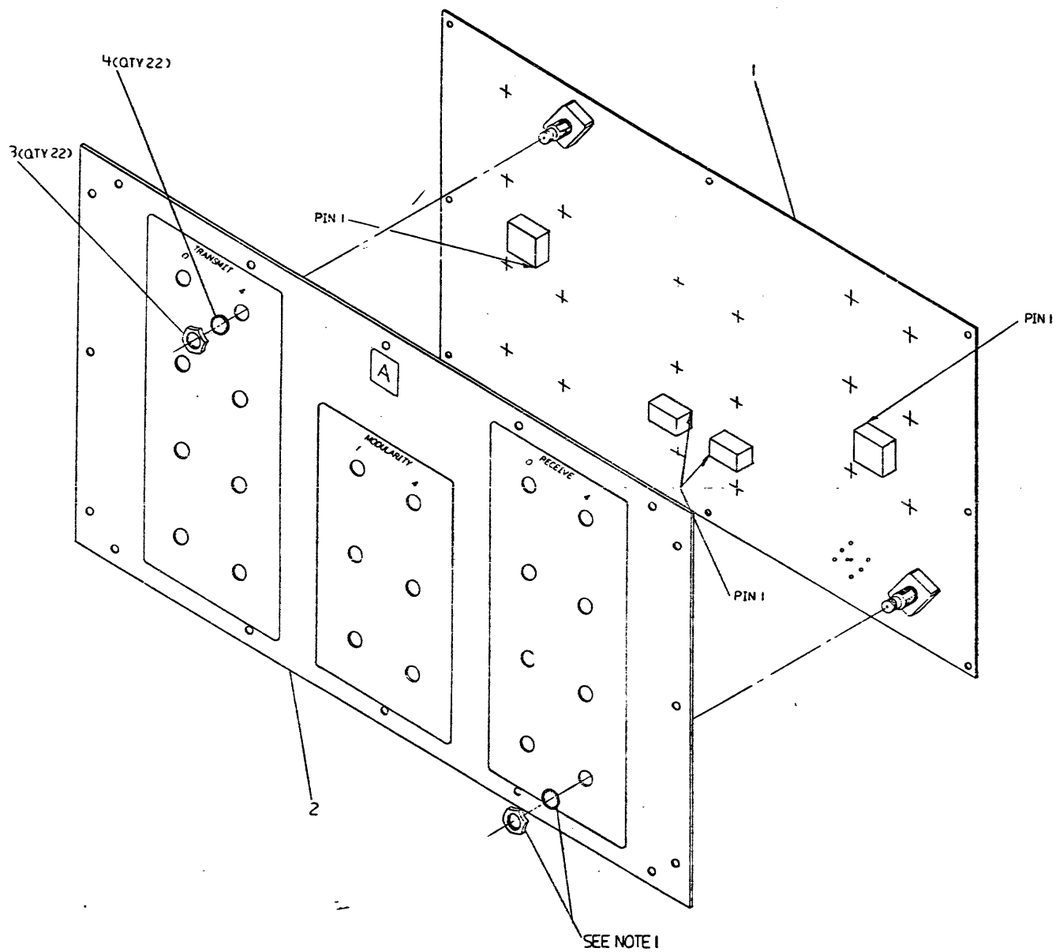

CFF SHEET PARTS LIST
SEE K-PL-7018717-0-D8P(Z2604A)

DESCRIPTION	DRAWING NO.	PART NO.	ITEM NO.

UNLESS OTHERWISE SPECIFIED DIMENSIONS ARE IN INCHES AND THE FOLLOWING TOLERANCES APPLY (PER DEC STD 114)

INCHES TOLERANCES	ANGLES ±2°30'	APPLICABLE DIMENSION RANGE (CHOOSE ONE)	DIMENSION RANGE IN INCHES					
			OVER 0 TO 6	OVER 6 TO 12	OVER 12 TO 48	OVER 48 TO 120	OVER 120 TO 48.0	OVER 48.0 TO 60.0
X ± ± .1	SURFACE QUALITY	☐						
XX ± ± .02		☐	± .18	± .25	± .38		± .16	
XXX ± ± .005		☐	± .004	± .005	± .012	± .016	± .024	± .31
QUANTITY & VARIATION	MICROINCHES	☐						

THIRD ANGLE PROJECTION

DO NOT SCALE DRAWING

REMOVE BURRS AND BREAK SHARP CORNERS

MATERIAL: SEE PARTS LIST

FINISH

		DATE
DR		17 JAN 91
CHK		18 NOV 91
DES ENG		22 JUN 92
MFG ENG		22 JUN 92
APPL ENG		

TITLE: FRONT PANEL ASSY

digital

DOCUMENT NUMBER: SIZE E CODE IDENT NUMBER 7018717-0-0 REV A

SCALE SHEET OF

REV | ECO NUMBER | DATE

ALTERNATE PART NUMBER

7018717-0-0

AUTOMATED BY PRTLST.3P(44)

P A R T S L I S T

LINE	ITEM	DOCUMENT NUMBER	PART NUMBER	DESCRIPTION	QUANTITY PER VARIATION 00
1	1	D-UA-5414216-0-0	5414216-00	STAR COUPLER MODULE	1
2	2	D-IA-7425772-0-0	7425772-00	PAN,STAR COUPLER	1
3	3		1219171-00	NUT,HEX , 1/2X 28X.63	22
4	4		1219172-00	WASHER,LOCK,INT,.6000D X .500ID	22

5 NOTE: ITEMS 3+4 SUPPLIED WITH 1217979 (ITEM 2 ON 5414216)

REVISION HISTORY			BASIC PART NO: 7018717										
ENG	ECO NUMBER	REV	SECTION A OF A	DRN: S. CHARTIER	DATE: 17-JUN-81	D	I	G	I	T	A	L	
---	INITIAL	A	SECTION. VARIATION INDEX [A] 00	CHK'D: M.BAPTISTE	DATE: 17-JUN-81	TITLE PARTS LIST FRONT PANEL ASSEMBLY							
			[B]	DES.ENG.: G.NORTON	DATE: 17-JUN-81								
			[C]	RESP.ENG.: R.NUEBLING	DATE: 17-JUN-81	DOCUMENT NUMBER							
			[D]			SIZE	CODE	NUMBER				REV	
			[E]	MFG.ENG.: M.WARSHAW	DATE: 17-JUN-81	K	PL	7018717-0-DBP				A	
			[F]	ASSEMBLY NUMBER: E-AD-7018717-0-0	TOP DOCUMENT NUMBER: E-AD-7018771-0-0	FILE NAME: Z2604A.PLS						EDIT # 6	

"THIS DRAWING AND SPECIFICATIONS HEREIN, ARE THE PROPERTY OF DIGITAL EQUIPMENT CORPORATION AND SHALL NOT BE REPRODUCED OR COPIED OR USED IN WHOLE OR IN PART AS THE BASIS FOR THE MANUFACTURE OR SALE OF ITEMS WITHOUT WRITTEN PERMISSION. COPYRIGHT (C) 1982, DIGITAL EQUIPMENT CORPORATION."

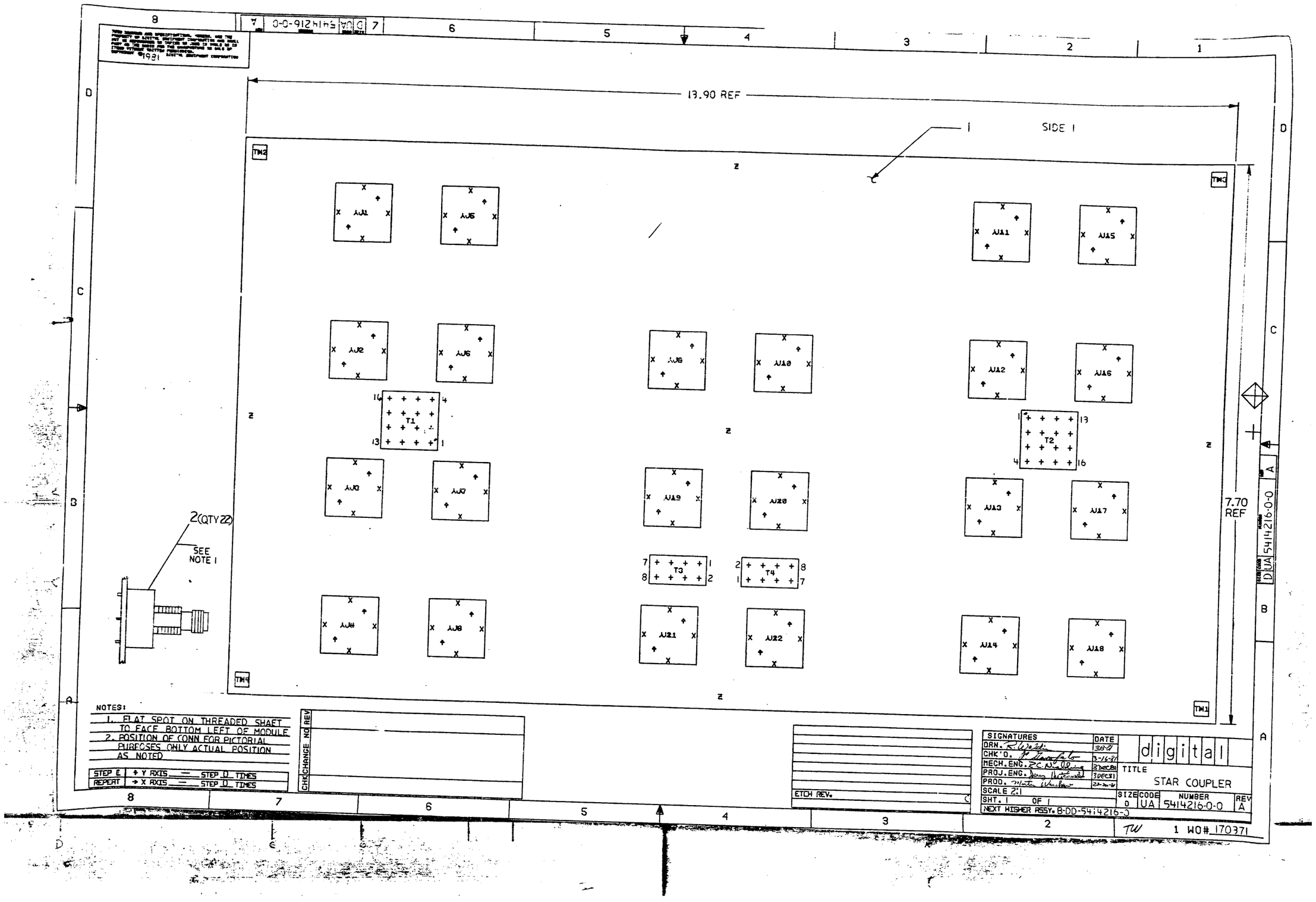
13.90 REF
SIDE 1
7.70 REF
2(QTY 22)
SEE NOTE 1
T1
T2
T3
T4
NOTES:
1. FLAT SPOT ON THREADED SHAFT TO FACE BOTTOM LEFT OF MODULE
2. POSITION OF CONN FOR PICTORIAL PURPOSES ONLY ACTUAL POSITION AS NOTED
STEP E ↑ Y AXIS — STEP D TIMES
REPEAT → X AXIS — STEP D TIMES
CHK CHANGE NO REV
ETCH REV.
SIGNATURES DATE
DRN. 3-8-87
CHK'D. 3-16-87
MECH.ENG. 30DEC81
PROJ.ENG. 30DEC81
PROD. 23-2-87
SCALE 2:1
SHT. 1 OF 1
NEXT HIGHER ASSY. B-DD-5414216-0
digital
TITLE
STAR COUPLER
SIZE D CODE UA NUMBER 5414216-0-0 REV A
TW 1 WO# 170371

LINE	ITEM	DOCUMENT NUMBER	PART NUMBER	DESCRIPTION	QTY PER VARIATION 00	REFERENCE DESIGNATOR
1	1	D-MC-5014215-0-0	5014215-00	DRILL AND ETCH BOARD	1	
2	2		1217979-00	CONN,COAX ILINE TNC PC MTG	32	J1-J32
3	3		1617993-00	POWER SPLITTER/COMBINER,4 WAY	2	T1,T2
4	4		1617994-00	POWER SPLITTER/COMBINER,2 WAY	2	T3,T4

REVISION HISTORY			BASIC PART NO: 5414216										
ENG	ECO NUMBER	REV	SECTION A OF A	DRN: J.CASEY	DATE: 06-JAN-82	D	I	G	I	T	A	L	
---	INITIAL	A	SECTION.VARIATION INDEX [A] 00 [B] [C] [D] [E] [F] [H] [J] [K] [L] [M] [N]	CHK'D: F.GAROFALO	DATE: 06-JAN-82	TITLE PARTS LIST CI STAR COUPLER							
				DES.ENG: R.NUEBLING	DATE: 06-JAN-82								
				RESP.ENG.: R.NUEBLING	DATE: 06-JAN-82	DOCUMENT NUMBER							
				MFG.ENG.: M.WARSHAW	DATE: 06-JAN-82	SIZE K	CODE PL	NUMBER 5414216-0-DBP			REV A		
				ASSEMBLY NUMBER: D-UA-5414216-0-0	TOP DOCUMENT NUMBER:	FILE NAME: Z1293A.PLS					EDIT # 2		

"THIS DRAWING AND SPECIFICATIONS HEREIN, ARE THE PROPERTY OF DIGITAL EQUIPMENT CORPORATION AND SHALL NOT BE REPRODUCED OR COPIED OR USED IN WHOLE OR IN PART AS THE BASIS FOR THE MANUFACTURE OR SALE OF ITEMS WITHOUT WRITTEN PERMISSION. COPYRIGHT (C) 1982. DIGITAL EQUIPMENT CORPORATION "

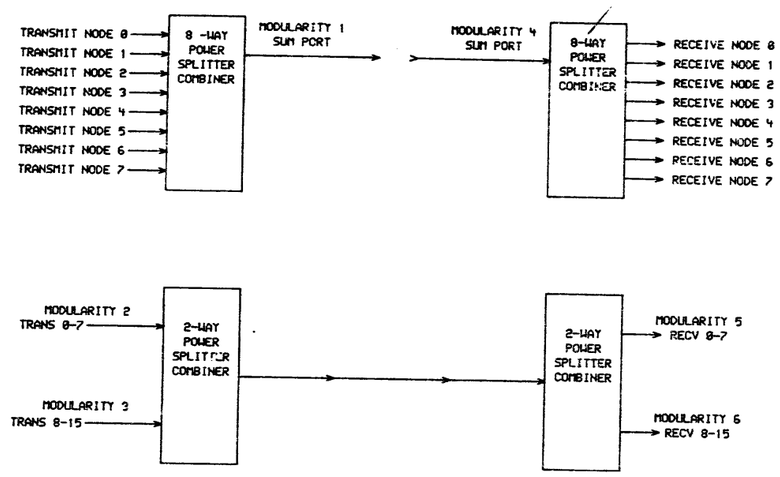

STAR COUPLER
BLOCK DIAGRAM

"THIS DRAWING AND SPECIFICATIONS, HEREIN, ARE THE PROPERTY OF DIGITAL EQUIPMENT CORPORATION AND SHALL NOT BE REPRODUCED OR COPIED OR USED IN WHOLE OR IN PART AS THE BASIS FOR THE MANUFACTURE OR SALE OF ITEMS WITHOUT WRITTEN PERMISSION. COPYRIGHT © 1981, DIGITAL EQUIPMENT CORPORATION"

REVISIONS		
CHK	CHANGE NO.	REV

digital

DRN. 90/00 J.W. Behm. DATE 23-NOV-81
CHK'D. J.C. Nuhle DATE
ENG. DATE 3 DEC 81
BOARD LOCATION:
SHEET 1 OF 1
[142,560]STRBLK.DRW 12-NOV-81 13:40
NEXT HIGHER ASSEMBLY: D-UA-5414216-0-0
FIRST USED ON OPTION/MODEL:

TITLE: STAR COUPLER BLOCK DIAGRAM

SIZE	CODE	NUMBER	REV.
D	BS	5414216-0-2	A

TW

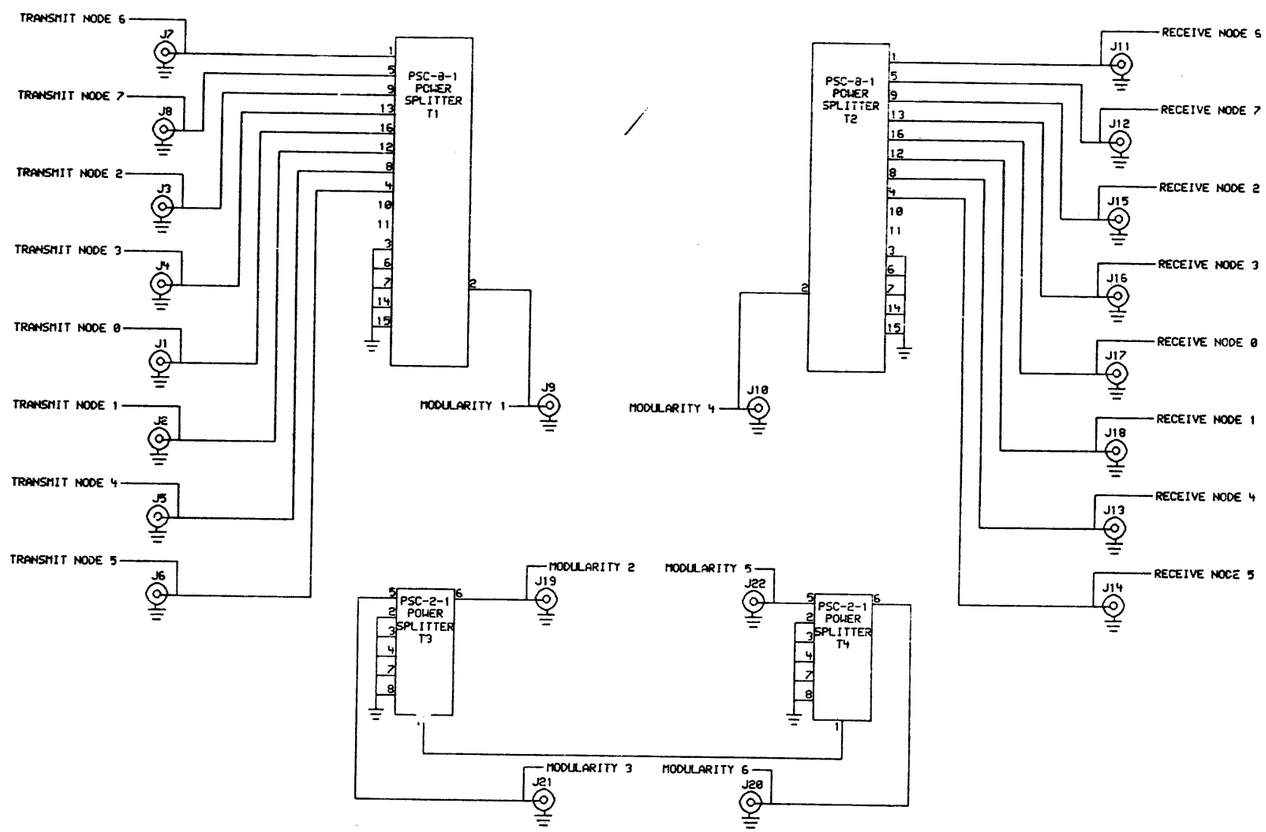

REVISIONS		
CHK	CHANGE NO.	REV

"THIS DRAWING AND SPECIFICATIONS, HEREIN, ARE THE PROPERTY OF DIGITAL EQUIPMENT CORPORATION AND SHALL NOT BE REPRODUCED OR COPIED OR USED IN WHOLE OR IN PART AS THE BASIS FOR THE MANUFACTURE OR SALE OF ITEMS WITHOUT WRITTEN PERMISSION. COPYRIGHT © 1981, DIGITAL EQUIPMENT CORPORATION"

digital

DRN. DATE 22-NOV-81
CHK DATE
[142,550]STAR.DRW 12-NOV-81 13:44
FIRST USED ON OPTION/MODEL:

ENG. DATE 3 DEC 81
BOARD LOCATION:
SHEET 1 OF 1
NEXT HIGHER ASSEMBLY: D-UA-54114216-00

TITLE: STAR COUPLER

SIZE	CODE	NUMBER	REV.
D	CS	54:4216-0-1	A

TW

"THIS DRAWING AND SPECIFICATIONS, HEREIN, ARE THE PROPERTY OF DIGITAL EQUIPMENT CORPORATION AND SHALL NOT BE REPRODUCED OR COPIED OR USED IN WHOLE OR IN PART AS THE BASIS FOR THE MANUFACTURE OR SALE OF ITEMS WITHOUT WRITTEN PERMISSION.
COPYRIGHT © 1982 DIGITAL EQUIPMENT CORPORATION"

SIZE C CODE AD NUMBER 7018530-0-0 REV. A

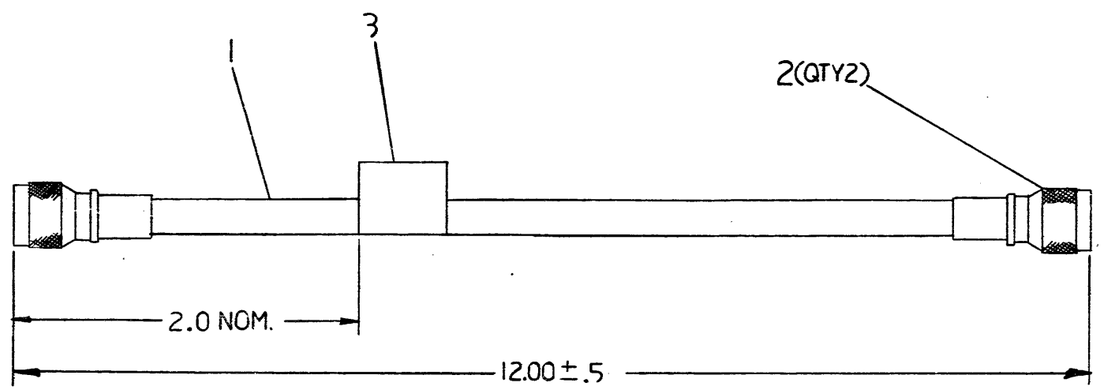

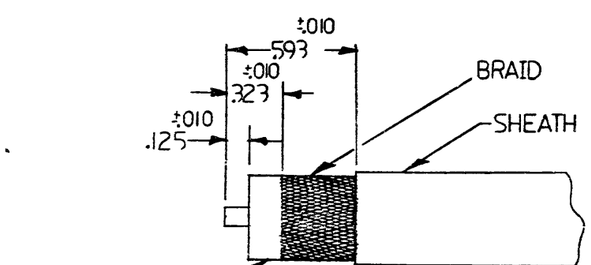

TRIM DIMENSIONS

CAUTION: SEE OFF SHEETS PARTS LIST
K-PL-7018530-0-DBP (Z2441A)

DESCRIPTION	DRAWING NO.	PART NO.	ITEM NO.

UNLESS OTHERWISE SPECIFIED DIMENSIONS ARE IN INCHES AND THE FOLLOWING TOLERANCES APPLY (PER DEC STD 114)

INCHES TOLERANCES	ANGLES ± 0° 30'	APPLICABLE DIMENSION RANGE (CHECK ONE)	OVER 0 TO 0.2	OVER 0.2 TO 1.2	OVER 1.2 TO 4.0	OVER 4.0 TO 12.0	OVER 12.0 TO 40.0	OVER 40.0 TO 80.0
.X = ± .1	SURFACE QUALITY		± .02		± .03	± .05	± .10	
.XX = ± .02			± .004	± .008	± .012	± .016	± .024	± .04
.XXX = ± .005	MICROINCHES							

QUANTITY & VARIATION

THIRD ANGLE PROJECTION

DO NOT SCALE DRAWING

REMOVE BURRS AND BREAK SHARP CORNERS

MATERIAL: SEE PARTS LIST

FINISH

DRN. J. Chartier	DATE 11 Feb 82	TITLE 8/16 JUMPER CABLE
CHKD. M. Baptista	DATE 12 FEB 82	digital
DSIG. ENG. K.C. Nuelling	DATE 12 FEB 82	
RESP. ENG. J. Hutchinson	DATE 12 FEB 82	DOCUMENT NUMBER
MFG. ENG. M. Wrshaw	DATE 12 FEB 82	SIZE C CODE AD NUMBER 7018530-0-0 REV. A
NEXT HIGHER DOC. B-DD-SC008-AA/AB		SCALE SHEET OF

REVISION HISTORY: DATE | ECO NUMBER | REV.

DRC 100D

SIZE C AD 7018530-0-0 REV. A

1 TW

AUTOMATED BY PRTLST.3P(44)

P A R T S L I S T

LINE	ITEM	DOCUMENT NUMBER	PART NUMBER	DESCRIPTION	QUANTITY PER VARIATION 00
1	1		9107531-00	CABLE,COAX, 1 COND,21AWG,50 OHM	1
2	2		1218647-00	CONN,COAX 1LINE PLUG TNC CRIMP	2
3	3		3616073-00	LABEL,ID W/COPY VERTICAL	1

REVISION HISTORY			
ENG	ECO NUMBER	REV	
---	INITIAL	A	

BASIC PART NO: 7016530

SECTION A OF A

SECTION. VARIATION INDEX
[A] 00
[B]
[C]
[D]
[E]
[F]

DRN: R.J. RILEY — DATE: 16-APR-82

CHK'D: R.J. RILEY — DATE: 16-APR-82

DES.ENG.: R. NUEBLING — DATE: 16-APR-82

RESP.ENG.: R. NUEBLING — DATE: 16-APR-82

MFG.ENG.: M. WARSHAW — DATE: 16-APR-82

ASSEMBLY NUMBER: C-AD-7018530-0-0

TOP DOCUMENT NUMBER:

D I G I T A L

TITLE PARTS LIST
8/16 JUMPER CABLE

DOCUMENT NUMBER

SIZE	CODE	NUMBER	REV
K	PL	7018530-0-DBP	A

FILE NAME: Z2441A.PLS

EDIT # 4

"THIS DRAWING AND SPECIFICATIONS HEREIN, ARE THE PROPERTY OF DIGITAL EQUIPMENT CORPORATION AND SHALL NOT BE REPRODUCED OR COPIED OR USED IN WHOLE OR IN PART AS THE BASIS FOR THE MANUFACTURE OR SALE OF ITEMS WITHOUT WRITTEN PERMISSION.
COPYRIGHT (C) 1982, DIGITAL EQUIPMENT CORPORATION "

"THIS DRAWING AND SPECIFICATIONS, HEREIN, ARE THE PROPERTY OF DIGITAL EQUIPMENT CORPORATION AND SHALL NOT BE REPRODUCED OR COPIED OR USED IN WHOLE OR IN PART AS THE BASIS FOR THE MANUFACTURE OR SALE OF ITEMS WITHOUT WRITTEN PERMISSION. COPYRIGHT © 1977, DIGITAL EQUIPMENT CORPORATION"

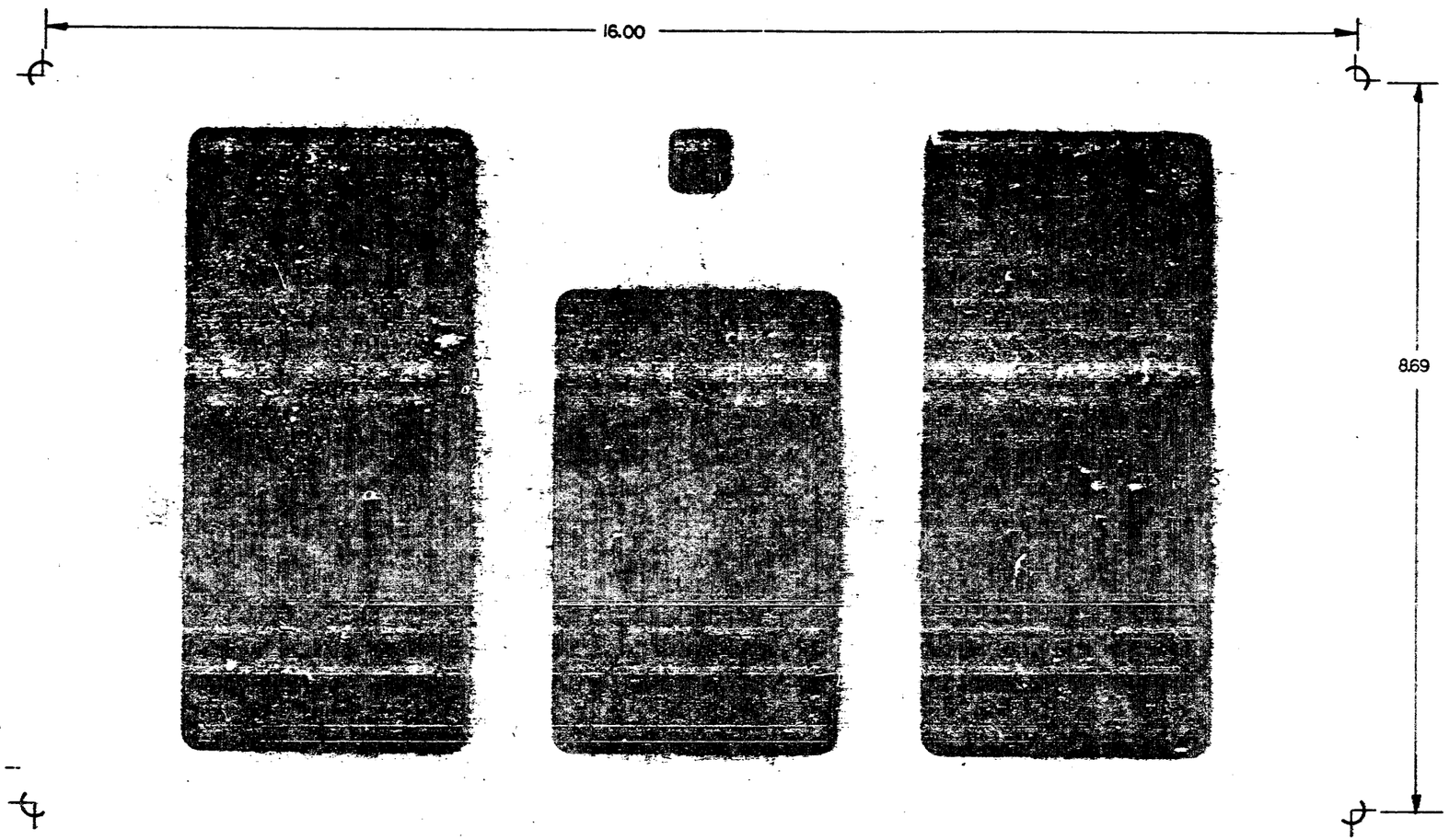

REVISIONS		
CHK	CHANGE NO.	REV.

O.K.
AMT. TO STOCK
INSPECTED BY
DATE 6-5-81
PART NO. DEC-3-(4881)-1469-N 172

DRN. Larry R.	6-4-81	FIRST USED ON digital
CHK'D. D.M. Matson	18 Jun 82	
ENG. H. [illegible]	1-19-82	TITLE SILKSCREEN, STAR COUPLER
PROJ. ENG. [illegible]	1-19-82	
PROD. D.K. Hine	1-19-82	
NEXT HIGHER ASSY.		
D-MD-7425772-0-0		SIZE C / CODE SS / NUMBER 7425772-0-1 / REV. A
SCALE 1/1		
SHEET / OF /		DIST

This drawing and specifications, herein, are the property of Digital Equipment Corporation and shall not be reproduced or copied or used in whole or in part as the basis for the manufacture or sale of items without written permission.

DIGITAL EQUIPMENT CORPORATION
MAYNARD MASSACHUSETTS

PACKAGING INSTRUCTION REV ____ DATE ____

TITLE PKG. ASSY SC008 STAR COUPLER

LEGEND

VARIATION PART	REV	USED ON	PACKAGE TYPE	REMARKS
37-00669-01	A1	SC008-AA/-AC	CUSTOMER	CABINET
37-00669-02	A1	SC008-AB/-AD	CUSTOMER	ASSEMBLY

PARTS LIST 37-00669-01

REFER TO OFF-SHEET PARTS LIST K-PL-3700669-0-DBP, REV A

PACKAGING INSTRUCTIONS 37-00669-01

STEP PROCEDURE FIGURES 1 AND 2

1. ROLL CABINET (SC008-AA OR SC008-AC (ITEM #1)) ONTO PALLET (99-06691-03 (ITEM #4)) AND BOLT DOWN THE FOUR (4) BRACKETS (74-26524-01 (ITEM #31)); (REFERENCE E-AD-7016995-0-0 (ITEM #36)).

2. SET UP REGULAR SLOTTED CARTON (99-05114-01 (ITEM #8)) USING TWO (2) FEET OF CARTON SEALING TAPE (99-05729-00 (ITEM #9)).

3. WRAP ONE (1) COVER, CABLE EXIT (74-26224-01 (ITEM #10)) USING SIX (6) FEET OF ANTISTATIC BUBBLEWRAP (99-06200-01 (ITEM #12)) AND PLACE INTO REGULAR SLOTTED CARTON.

4. WRAP EACH OF THE TWO (2) CABLE COVER MTG. BRACKETS (74-26225-01 (ITEM #11)) IN THREE (3) FEET OF ANTISTATIC BUBBLEWRAP.

5. PLACE THE FOLLOWING ITEMS INTO A POLYETHYLENE BAG (99-06557-35 (ITEM #13)):

ITEM NUMBER	DIGITAL PART NUMBER	DESCRIPTION	QUANTITY
16	90-06074-03	SCREW, TRUS, PHIL 10-32 X 5/8	4
18	36-19264-17	LABEL, NODE, ID	2

SHEETS 4 THRU 7, PC CHANGE

ENG	APPR	SIZE	CODE	NUMBER	REV
Gregson Murphy 7/8	S Ryan	A	PA	3700669-0-0	A

SHEET 1 OF 7

PACKAGING INSTRUCTION CONTINUATION SHEET

TITLE

PKG

6. PLACE THE DOOR HINGE BRACKET (74-22221-00 (ITEM #14)) AND ONE (1) LEFT HAND PIVOT BRACKET (74-22272-01 (ITEM #15)) INTO THE REGULAR SLOTTED CARTON.

7. WAD AND PLACE FOUR (4) FEET OF ANTISTATIC BUBBLEWRAP INTO CARTON.

8. CLOSE AND SEAL THE REGULAR SLOTTED CARTON USING TWO (2) FEET OF CARTON SEALING TAPE.

9. PLACE THE REGULAR SLOTTED CARTON ON THE PALLET DECK INSIDE THE CABINET. SEE FIGURE 2.

10. STRAP THE CARTON TO THE CABINET DECK FROM FRONT TO BACK USING EIGHT (8) FEET OF STRAPPING (99-05734-00 (ITEM #6)).

11. PLACE TWO (2) ALLEN WRENCHS (47-00045-00 (ITEM #17)) INTO A POLYETHYLENE BAG (99-06557-01 (ITEM #29)) AND STAPLE IT TO THE REAR DECK OF THE PALLET.

12. PLACE A POLYETHYLENE BAG (99-05128-08 (ITEM #2)) OVER THE CABINET.

13. SET UP TUBE (99-06761-05 (ITEM #3)) AND PLACE OVER THE CABINET SO THAT THE FLANGED FLAP FACES DOWN.

14. PLACE CORRUGATED PAD (99-06936-01 (ITEM #35)) INTO THE TUBE ON TOP OF THE CABINET.

15. PLACE THE TWO (2) RAMPS (99-06937-10 (ITEM #20)) SIDE BY SIDE ON TOP OF THE CORRUGATED PAD SO THAT THE METAL GUIDES FIT INTO THE SLOTTED AREA OF THE PAD.

16. SET UP AND PLACE THE SELF LOCKING CAP (99-06761-01 (ITEM #5)) ONTO THE TUBE.

17. STRAP DOWN THE CAP AND TUBE USING TWENTY-EIGHT (28) FEET OF POLYESTER STRAPPING AND TWO (2) ANGLEBOARDS (99-06185-14 (ITEM #7)).

PACKAGING INSTRUCTIONS 37-00669-02

STEP PROCEDURE FIGURE 3 AND 4

1. SET UP THE REGULAR SLOTTED CARTON (99-06927-01 (ITEM #27)) USING TWENTY-EIGHT (28) INCHES OF CARTON SEALING TAPE (99-05729-00 (ITEM #9)).

		SIZE	CODE	NUMBER	REV
		A	PA	3700669-0-0	A

SHEET 2 OF 7

PACKAGING INSTRUCTION CONTINUATION SHEET

TITLE

PKG

2. PLACE A STAR COUPLER ASSEMBLY (70-18771-00 (ITEM #21)) ONTO THE CORRUGATED/POLYETHYLENE LAMINATE (99-06928-01 (ITEM #22)) WITH THE PLASTIC BRACKETS FACING UP.

3. WRAP THE STAR COUPLER ASSEMBLY WITH THE LAMINATE AND PLACE IT INTO THE REGULAR SLOTTED CARTON.

4. PLACE ONE (1) EACH OF THE FOLLOWING ITEMS INTO A POLYETHYLENE BAG (99-06557-14 (ITEM #23)) AND PLACE IT INTO THE REGULAR SLOTTED CARTON.

ITEM NUMBER	DIGITAL PART NUMBER	DESCRIPTION
24	36-18845-01	LABEL, NODE, 9-16
25	36-18845-02	LABEL, NODE, MARKER "8'
26	36-18806-01	LABEL, CONFIGURATION PATH C1780
19	36-19211-01	LABEL, CARTON BEND RADII

5. PLACE ONE (1) TERMINATOR STORAGE ASSY (70-18770-00 (ITEM #30)) INTO A POLYEHTYLENE BAG (99-06557-14 (ITEM #23)) AND PLACE IT INTO THE REGULAR SLOTTED CARTON.

6. PLACE THE FOLLOWING ITEMS INTO A POLYETHYLENE BAG (99-06557-01 (ITEM #29)) AND PLACE IT INTO THE REGULAR SLOTTED CARTON.

ITEM NUMBER	DIGITAL PART NUMBER	DESCRIPTION	QUANTITY
32	90-09700-00	SCREW, TRUSS, PHIL, SEMS 10 - 32 X .50	4
16	90-06074-03	SCREW, TRUSS, PHIL 10 -32 X .63	4
33	90-06664-00	WASHER, FLAT .437 O.D. X .218 I.D.	4

7. CLOSE AND SEAL THE REGULAR SLOTTED CARTON USING TWENTY-EIGHT (28) INCHES OF CARTON SEALING TAPE.

8. PALLETIZE USING GENERAL PURPOSE PALLET (99-06199-00 (ITEM #28)) PER FIGURE 4. UNITIZE BY USING FOUR (4) ANGLEBOARD (99-06185-05 (ITEM #34)) AND FOUR (4) PIECES OF POLYESTER STRAPPING (99-05734-00 (ITEM #6)).

		SIZE	CODE	NUMBER	REV
		A	PA	3700669-0-0	A

SHEET 3 OF 7

"THIS DRAWING AND SPECIFICATIONS, HEREIN, ARE THE PROPERTY OF DIGITAL EQUIPMENT CORPORATION AND SHALL NOT BE REPRODUCED OR COPIED OR USED IN WHOLE OR IN PART AS THE BASIS FOR THE MANUFACTURE OR SALE OF ITEMS WITHOUT WRITTEN PERMISSION.
COPYRIGHT © 1982 DIGITAL EQUIPMENT CORPORATION"

SIZE C CODE PA NUMBER 3700669-0-0 REV. A

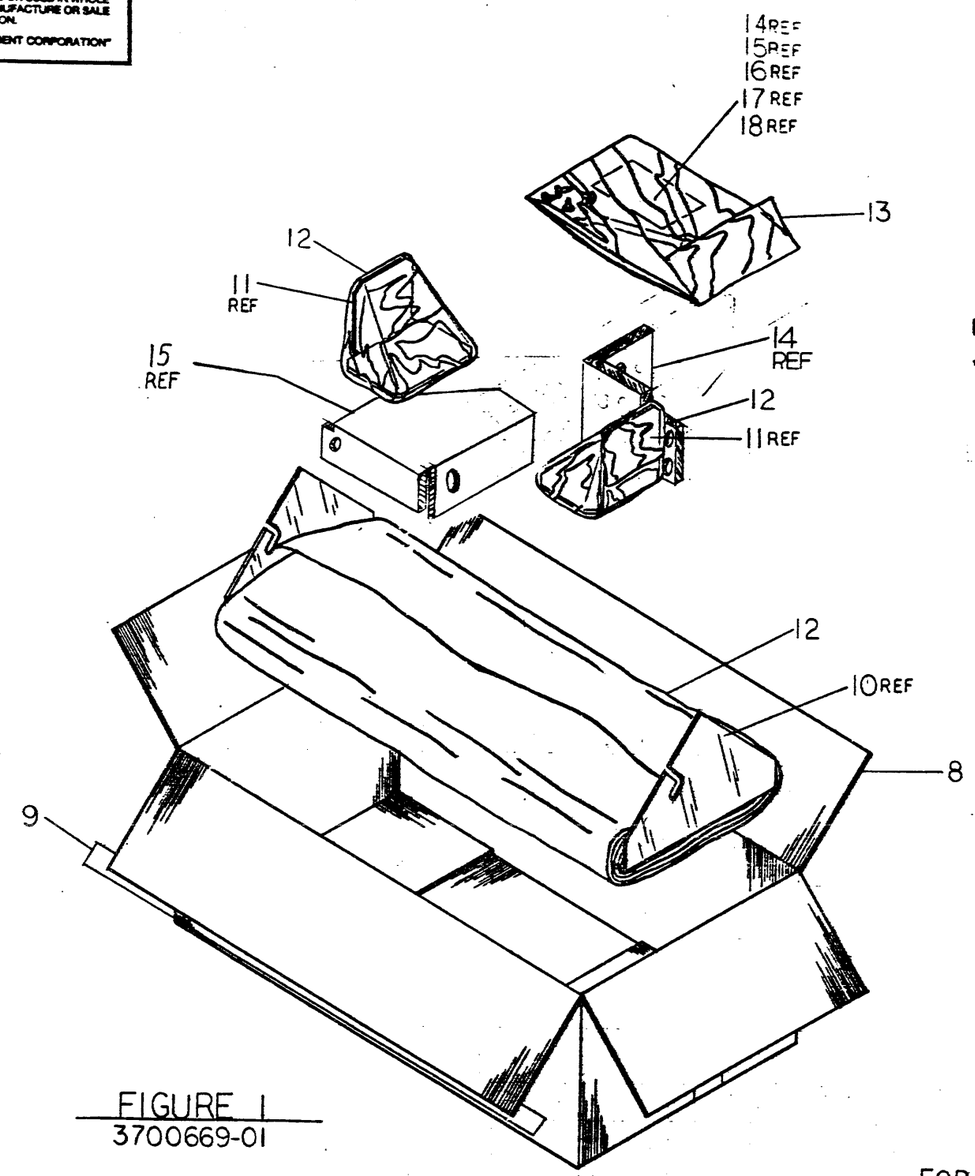

FIGURE 1
3700669-01

PACKAGE DIMENSIONS, WEIGHTS & PLASTIC PACKING MATERIAL

	USA		METRIC	
WEIGHT	9.00	LBS.	4.08	KG.
LENGTH	22.00	IN.	558	MM
WIDTH	15.00	IN.	381	MM
HEIGHT	8.50	IN.	215	MM
CUBE	1.62	CU. FT.	0.05	CU.M
DENSITY	6 LBS./CU. FT.		89	KG/CU.M
*PLASTIC	25% VOL	— % WT	PE	TYPE

*% VOLUME (EXPANDED)
% WEIGHT (UNEXPANDED)

FOR OFF SHEET PARTS LIST SEE K-PL-3700669-0-DBP

DRN. G. GYORKE	DATE 7/82	TITLE digital	
CHK'D. J. BARRETT	DATE 7/82	PKG ASSY SC008	
DES. ENG. G. LARSEN	DATE 7/82	STAR COUPLER	
RESP. ENG. G. LARSEN	DATE 7/82		
MFG. ENG. NONE	DATE —	DOCUMENT NUMBER	
NEXT HIGHER DOC.		SIZE C CODE PA NUMBER 3700669-0-0 REV. A	
		SCALE	SHEET 4 OF 7

REVISION HISTORY

DATE	ECO NUMBER	REV.

"THIS DRAWING AND SPECIFICATIONS, HEREIN, ARE THE PROPERTY OF DIGITAL EQUIPMENT CORPORATION AND SHALL NOT BE REPRODUCED OR COPIED OR USED IN WHOLE OR IN PART AS THE BASIS FOR THE MANUFACTURE OR SALE OF ITEMS WITHOUT WRITTEN PERMISSION.
COPYRIGHT © 1982 DIGITAL EQUIPMENT CORPORATION"

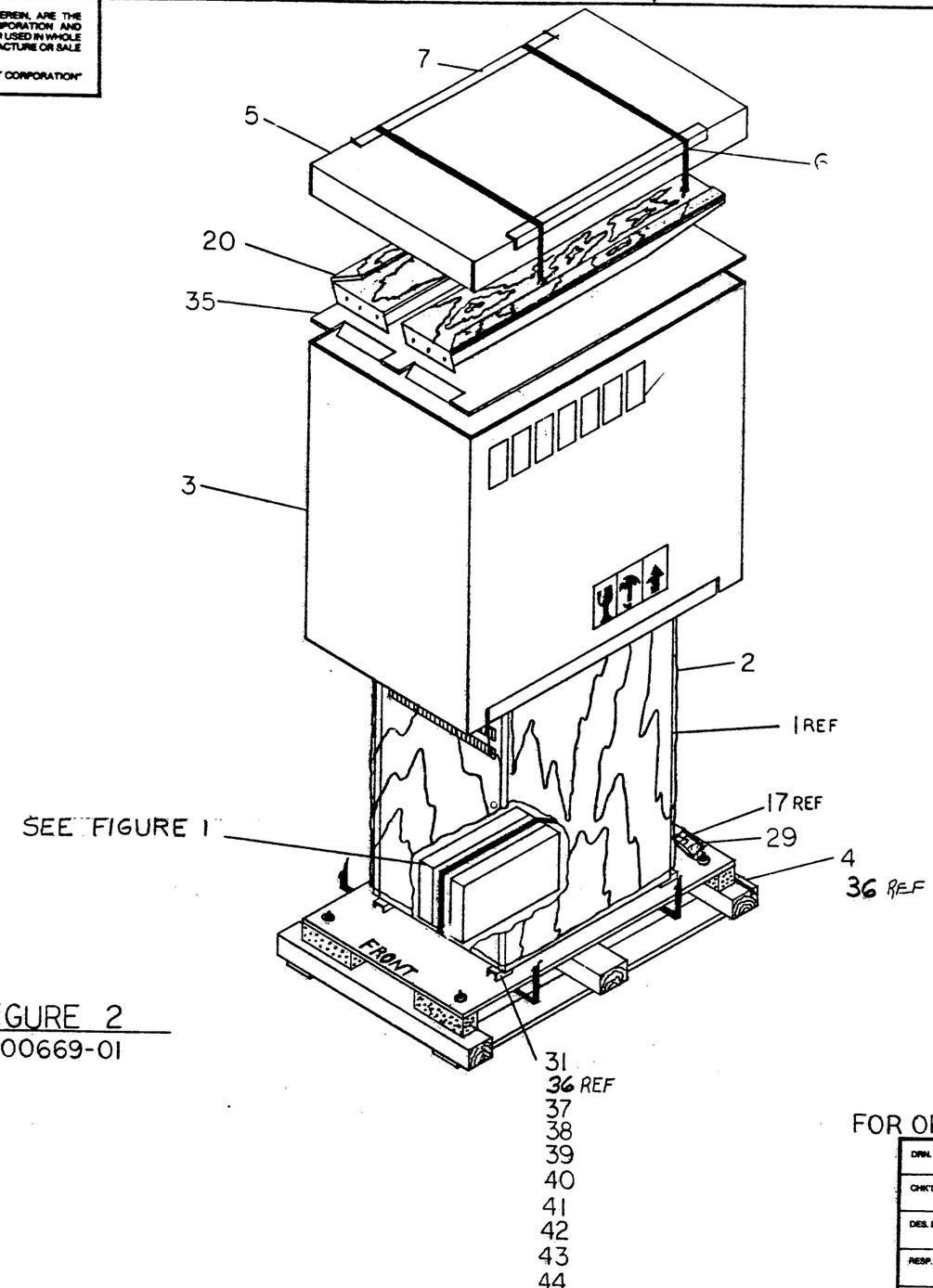

FIGURE 2
3700669-01

PACKAGE DIMENSIONS, WEIGHTS & PLASTIC PACKING MATERIAL

	USA		METRIC	
WEIGHT	300.00	LBS.	136	KG.
LENGTH	42.00	IN.	1067	MM
WIDTH	29.00	IN.	737	MM
HEIGHT	52.00	IN.	1321	MM
CUBE	36.85	CU. FT.	1.04	CU.M
DENSITY	& LBS./CU. FT.		131	KG/CU.M
*PLASTIC	— % VOL	— % WT	—	TYPE

*% VOLUME (EXPANDED)
% WEIGHT (UNEXPANDED)

FOR OFF SHEET PARTS LIST SEE K-PL-3700669-0-DBP

DRN.	DATE	TITLE digital
CHK'D.	DATE	PKG ASSY SC008 STAR COUPLER
DES. ENG.	DATE	
RESP. ENG.	DATE	
MFG. ENG.	DATE	DOCUMENT NUMBER
NEXT HIGHER DOC.		SIZE C CODE PA NUMBER 3700669-0-0 REV. A
		SCALE SHEET 5 OF 7

REVISION HISTORY: DATE | ECO NUMBER | REV.

DRC 1118

SIZE C PA NUMBER 3700669-0-0 REV. A

"THIS DRAWING AND SPECIFICATIONS, HEREIN, ARE THE PROPERTY OF DIGITAL EQUIPMENT CORPORATION AND SHALL NOT BE REPRODUCED OR COPIED OR USED IN WHOLE OR IN PART AS THE BASIS FOR THE MANUFACTURE OR SALE OF ITEMS WITHOUT WRITTEN PERMISSION.
COPYRIGHT © 1982 DIGITAL EQUIPMENT CORPORATION"

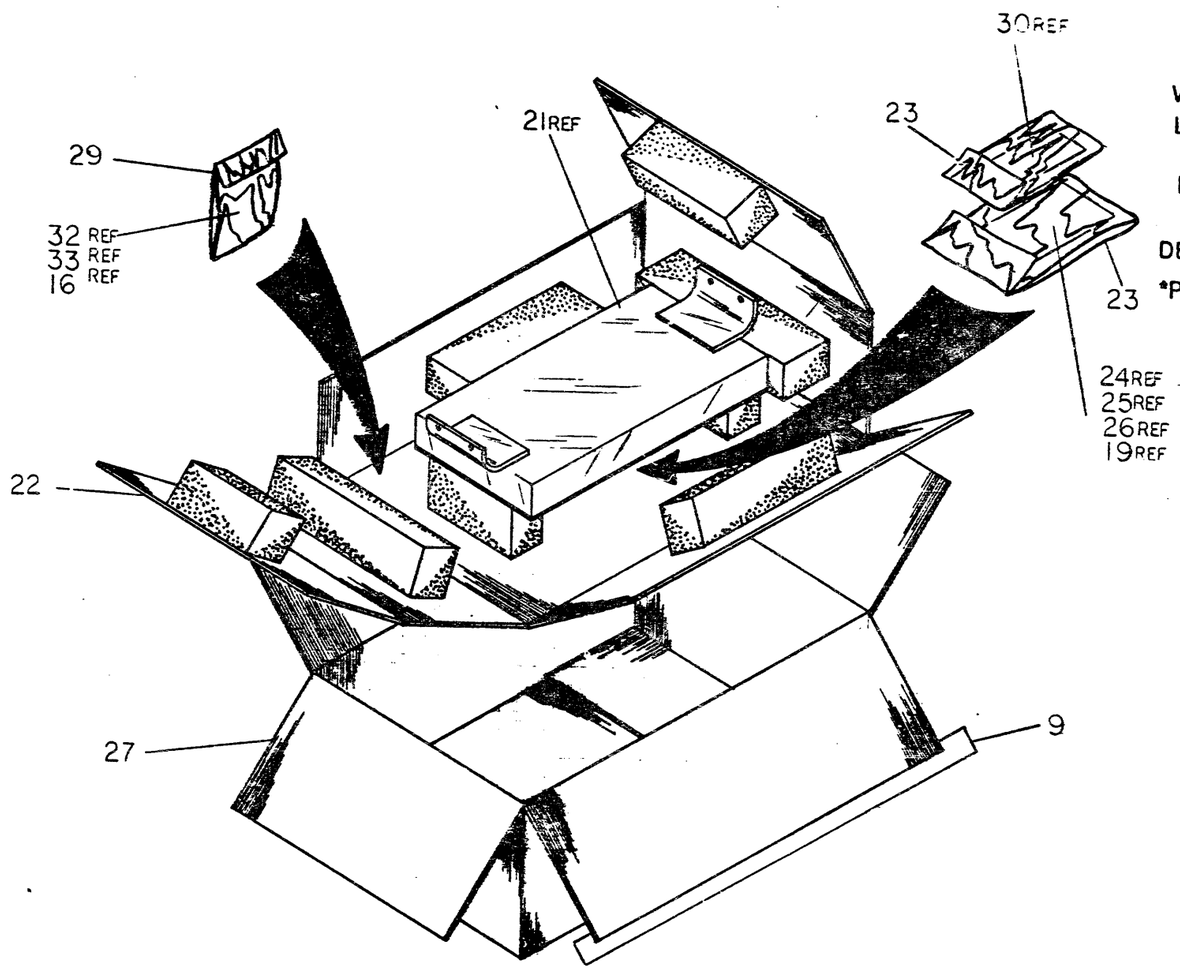

FIGURE 3
3700669-02

PACKAGE DIMENSIONS, WEIGHTS & PLASTIC PACKING MATERIAL

	USA		METRIC	
WEIGHT	14.00	LBS.	6.35	KG.
LENGTH	22.63	IN.	575	MM
WIDTH	14.63	IN.	371	MM
HEIGHT	8.75	IN.	222	MM
CUBE	1.67	CU. FT.	.05	CU.M
DENSITY	8 LBS./CU. FT.		128	KG/CU.M
*PLASTIC	5 % VOL	— % WT	P.E.	TYPE

*% VOLUME (EXPANDED)
% WEIGHT (UNEXPANDED)

FOR OFF SHEET PARTS LIST SEE K-PL-3700669-0-DBP

DRN.	DATE	TITLE digital PKG ASSY SC008 STAR COUPLER
CHK'D.	DATE	
DES. ENG.	DATE	
RESP. ENG.	DATE	
MFG. ENG.	DATE	
NEXT HIGHER DOC.		

DOCUMENT NUMBER

SIZE	CODE	NUMBER	REV.
C	PA	3700669-0-0	A

SCALE SHEET 6 OF 7

REVISION HISTORY

DATE	ECO NUMBER	REV.

SIZE C CODE PA NUMBER 3700669-0-0 REV. A

RC 111B

"THIS DRAWING AND SPECIFICATIONS, HEREIN, ARE THE PROPERTY OF DIGITAL EQUIPMENT CORPORATION AND SHALL NOT BE REPRODUCED OR COPIED OR USED IN WHOLE OR IN PART AS THE BASIS FOR THE MANUFACTURE OR SALE OF ITEMS WITHOUT WRITTEN PERMISSION.
COPYRIGHT © 1982 DIGITAL EQUIPMENT CORPORATION"

SIZE C | CODE PA | NUMBER 3700669-0-0 | REV. A

5 CARTONS PER TIER
4 TIERS HIGH

PACKAGE DIMENSIONS, WEIGHTS & PLASTIC PACKING MATERIAL

	USA		METRIC	
WEIGHT	320.0	LBS.	145	KG.
LENGTH	48.00	IN.	1219	MM
WIDTH	42.00	IN.	1066	MM
HEIGHT	40.00	IN.	1016	MM
CUBE	46.66	CU. FT.	1.32	CU.M
DENSITY	7 LBS./CU. FT.		112	KG/CU.M
*PLASTIC	9 % VOL	% WT	P.E.	TYPE

*% VOLUME (EXPANDED)
% WEIGHT (UNEXPANDED)

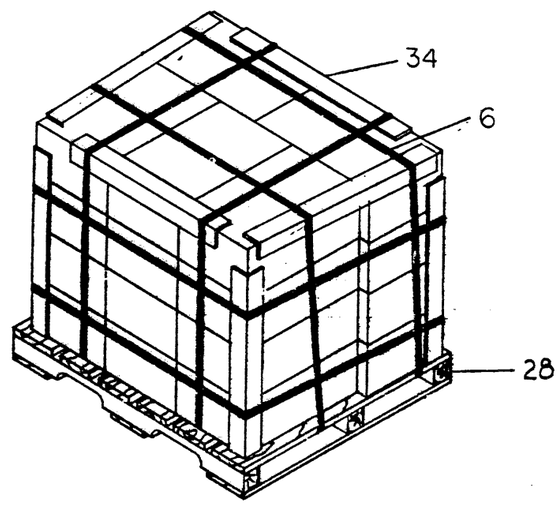

FIGURE 4
3700669-02

FOR OFF SHEET PARTS LIST SEE K-PL-3700669-0-DBP

DRN.	DATE	TITLE digital
CHK'D.	DATE	PKG ASSY SC008 STAR COUPLER
DES. ENG.	DATE	
RESP. ENG.	DATE	
MFG. ENG.	DATE	DOCUMENT NUMBER
NEXT HIGHER DOC.		SIZE C · CODE PA · NUMBER 3700669-0-0 · REV. A
		SCALE · SHEET 7 OF 7

REVISION HISTORY

DATE	ECO NUMBER	REV.

DRC 1118

SIZE C | CODE PA | NUMBER 3700669-0-0 | REV. A

THIS DRAWING AND SPECIFICATIONS, HEREIN, ARE THE PROPERTY OF DIGITAL EQUIPMENT CORPORATION, AND SHALL NOT BE REPRODUCED OR DISCLOSED, IN WHOLE OR IN PART, AS THE BASIS FOR THE MANUFACTURE OR SALE OF ITEMS WITHOUT WRITTEN PERMISSION.
COPYRIGHT © 1982 DIGITAL EQUIPMENT CORPORATION

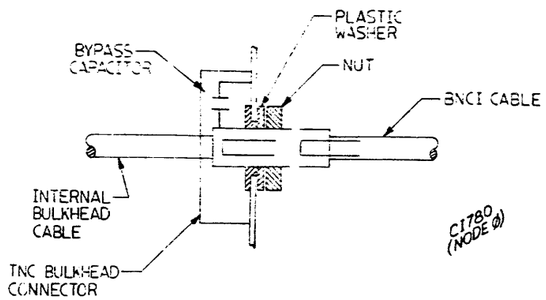

DETAIL A
SCALE: NONE

NOTE: CABLE SHIELD IS AT RF GROUND DUE TO BYPASS, BUT NOT AT DC GROUND DUE TO SHOLDER WASHER.

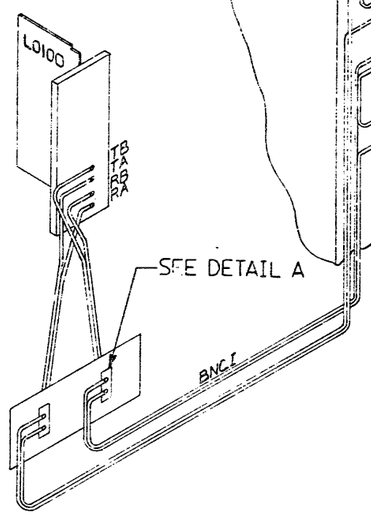

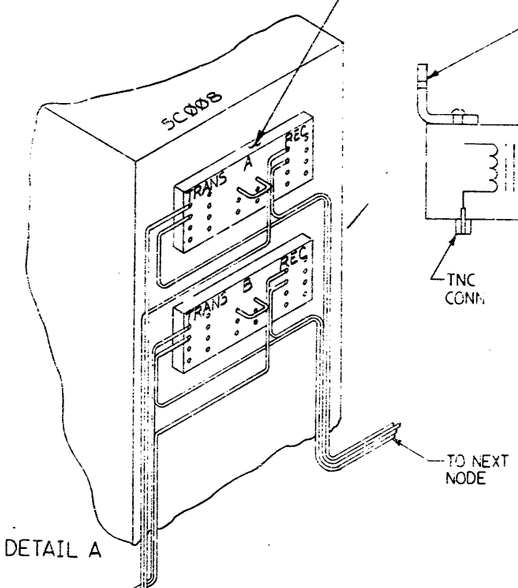

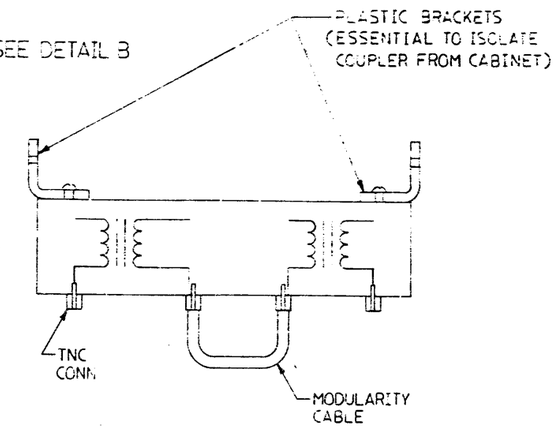

DETAIL B
SCALE: NONE
NOTE: ONLY ONE PATH SHOWN FOR SIMPLICITY.

CAUTION: DO NOT DEFEAT ISOLATION AT THE BULKHEAD CONNECTOR (DETAIL A) OR AT THE STAR COUPLER (DETAIL B).

REVISION HISTORY		
DATE	ECO NUMBER	REV

DESCRIPTION	DRAWING NO.	PART NO.	ITEM NO.

UNLESS OTHERWISE SPECIFIED DIMENSIONS ARE IN INCHES AND THE FOLLOWING TOLERANCES APPLY (PER DEC STD 114)

INCHES TOLERANCES	ANGLES ±0°30'	APPLICABLE DIMENSION RANGE (CHECK ONE)	DIMENSION RANGE IN INCHES: OVER 0 TO .2	OVER .2 TO 1.2	OVER 1.2 TO 4.0	OVER 4.0 TO 12.0	OVER 12.0 TO 40.0	OVER 40.0 TO 60.0
.X = ± .1	SURFACE QUALITY	☐		± .02	± .03	± .05	± .10	
.XX = ± .02	✓	☐	± .004	± .008	± .012	± .016	± .024	± .04
.XXX = ± .005	MICROINCHES	☐						

QUANTITY & VARIATION

THIRD ANGLE PROJECTION

DO NOT SCALE DRAWING

REMOVE BURRS AND BREAK SHARP CORNERS

MATERIAL

FINISH

		DATE
DRN	A. Kodar	2 FEB 82
CHK'D	M. Sapienza	2 FEB 82
DES. ENG.	R.C.M. Alsing	12 FEB 82
RESP. ENG.	[illegible]	[illegible]
MFG. ENG.	[illegible]	12 FEB 82
NEXT HIGHER DUC	B-TC-SC008-A-1	

TITLE: SC008 SYSTEM INTERCONNECT

digital

DOCUMENT NUMBER: SIZE D, CODE IC, NUMBER SC008-0-2, REV A

SCALE NONE, SHEET 1 OF

TW

DRD 1000